GENERAL NOTES

1. THE CONTRACTOR SHALL VERIFY ALL DIMENSIONS BY MEASUREMENTS AT THE JOB SITE, AND SHALL TAKE ANY AND ALL OTHER MEASUREMENTS NECESSARY TO VERIFY THE DRAWINGS AND TO PERFORM HIS WORK PROPERLY. ANY DISCREPANCY BETWEEN THE DRAWINGS AND THE MEASURED DIMENSIONS OF THE EXISTING STRUCTURE SHALL BE IMMEDIATELY BROUGHT TO THE ATTENTION OF THE ARCHITECT. NO WORK SHALL PROCEED UNTIL SUCH DISCREPANCY HAS BEEN RECTIFIED. SUCH DISCREPANCIES BETWEEN THE DRAWINGS AND THE MEASURED DIMENSIONS SHALL NOT BE REASON FOR ANY EXTRA COST OR DELAY IN THE EXECUTION OF THE WORK AND SHALL BE PERFORMED PER INTENT OF THE CONTRACT DOCUMENTS AT NO EXTRA COST TO THE OWNER.
2. ALL DIMENSIONS INDICATED ON THE DRAWINGS ARE APPROXIMATE AND SHALL NOT BE USED FOR ORDERING AND/OR FABRICATING MATERIALS. THE CONTRACTOR SHALL VERIFY/CHECK ALL DIMENSIONS PRIOR TO ORDERING AND/OR FABRICATING MATERIALS.
3. THE CONTRACTOR SHALL NOT DETAIL, ORDER AND/OR FABRICATE ANY MATERIAL WITHOUT COORDINATING THE SAME WITH THE ACTUAL FIELD CONDITIONS. THE CONTRACTOR ALONE IS RESPONSIBLE FOR THE PROPER FITTING AND CONNECTION OF THE CONSTRUCTION.
4. THE CONTRACTOR SHALL PROVIDE ALL LABOR, MATERIALS, EQUIPMENT, TOOLS, APPLIANCES, SERVICES, TRUCKING, HOISTING, SCAFFOLDING, TESTING, LAYOUT, SUPERVISION, ENGINEERING AND ALL OTHER OPERATIONS REQUIRED TO FURNISH AND INSTALL ALL WORK REQUIRED IN THE CONTRACT DOCUMENTS.
5. THE CONTRACTOR REPRESENTS THAT HE IS FAMILIAR WITH, AND HAS EXPERTISE IN THE SCOPE OF THIS WORK. THE CONTRACTOR AGREES THAT THE CONTRACT INCLUDES ALL WORK FOR THAT SCOPE AS MAY BE REQUIRED.
6. ALL WORK SHALL BE CARRIED OUT IN STRICT ACCORDANCE WITH ALL GOVERNING CODES (SEE PROJECT DATA, GENERAL REQUIREMENTS) , AND REGULATIONS, AND IN ACCORDANCE WITH THE SAFETY ORDERS OF THE STATE INDUSTRIAL ACCIDENT COMMISSION, AND THE RULES AND REGULATIONS OF THE NATIONAL AND LOCAL BOARDS OF FIRE UNDERWRITERS
7. THE CONTRACTOR SHALL SUPERVISE AND DIRECT HIS WORK AND HE SHALL BE SOLELY RESPONSIBLE FOR ALL CONSTRUCTION MEANS, METHODS, TECHNIQUES, SEQUENCES AND PROCEDURES. AS A PART OF HIS RESPONSIBILITY, THE CONTRACTOR SHALL DESIGN AND SUPERVISE ANY SCAFFOLDING FOR HIS WORKMEN AND SHORING OF NEW AND EXISTING ELEMENTS OF THE CONSTRUCTION AFFECTED BY HIS WORK.
8. VERIFY THE CONDITIONS OF REQUIRED CONSTRUCTION AT THE SITE. COMPARE THESE WITH THE DRAWINGS AND ANY DIFFERENCES SHALL BE BROUGHT TO THE ATTENTION OF THE ARCHITECT FOR CLARIFICATION BEFORE THE BID PROPOSAL IS SUBMITTED. THE SUBMISSION OF THE BID PROPOSAL IMPLIES THAT AN INVESTIGATION OF THE SITE CONDITIONS HAS BEEN MADE AND THE METHODS OF CONSTRUCTION ARE UNDERSTOOD.
9. THE OWNER WILL NOT BE RESPONSIBLE FOR LOSS OF, OR DAMAGE TO, ANY OF THE CONTRACTOR'S TOOLS, EQUIPMENT OR MATERIALS BY ANY CAUSE.
10. THE CONTRACTOR IS RESPONSIBLE FOR PROTECTION OF HIS WORK DURING STORAGE, TRANSIT, INSTALLATION, AND UNTIL FINAL ACCEPTANCE. UPON COMPLETION, THE CONTRACTOR SHALL CLEAN ALL WORK AND REPAIR AND REFINISH ANY DAMAGE TO THE SATISFACTION OF THE ARCHITECT AS PART OF THE CONTRACT.
11. THE CONTRACTOR SHALL REMOVE ALL RUBBISH AND DEBRIS FROM THE PREMISES AT THE CLOSE OF EACH DAYS WORK. ALL SUCH MATERIALS SHALL BE DISPOSED OF OFF-SITE IN A LEGAL MANNER. THE AREA OF OPERATION SHALL BE MAINTAINED BROOM CLEAN AT ALL TIMES.
12. NOTHING STATED IN THE CONTRACT DOCUMENTS IS INTENDED TO CONFLICT WITH ANY APPLICABLE STANDARD, REGULATION OR CODE. IF CONFLICTS ARE FOUND, NOTIFY THE ARCHITECT IMMEDIATELY. CONTRACTOR IS RESPONSIBLE TO CONSTRUCT THE WORK IN ACCORDANCE WITH ALL APPLICABLE STANDARDS, REGULATIONS, ORDINANCES AND CODES.
13. WHEN MANUFACTURERS OF MATERIALS OR FIXTURES USED ON THIS PROJECT PROVIDE INSTALLATION OR MAINTENANCE DIRECTIONS NOT COVERED IN THE SPECIFICATIONS OR DETAILED ON THE DRAWINGS. THE CONTRACTOR FURNISHING THE ITEM SHALL FOLLOW SUCH DIRECTIONS, AND SHALL ISSUE APPROPRIATE COPIES TO HIS SUB-CONTRACTORS AND TO OTHER AFFECTED CONTRACTORS.
14. INSTALL ALL ITEMS RIGID AND SECURE, PLUMB AND LEVEL. IN ALL INSTANCES WHERE MILLWORK OR CASEWORK ADJOINS OTHER WORK, CONTRACTOR SHALL PROVIDE A TIGHT FITTING JOINT.
15. THE GENERAL CONTRACTOR SHALL PROVIDE TO THE ARCHITECT, DETAILED/DIMENSIONED "RECORD DRAWINGS" OF ALL THE UTILITIES INSTALLED IN THE PROJECT. THIS PLAN SHALL IDENTIFY ALL TYPES, SIZES, ELEVATIONS, PIPE LOCATIONS, VALVE LOCATIONS, CAP LOCATIONS, ETC.
16. COORDINATE ANY SECURITY EQUIPMENT WITH OWNER.
17. THE CONTRACTOR IS TO PROVIDE A COMPLETE DESIGN-BUILD PACKAGE FOR THE FIRE SPRINKLER SYSTEM. THIS DESIGN SHALL BE APPROVED BY THE APPLICABLE AGENCIES PRIOR TO THE INSTALLATION. (IF REQUIRED)
18. THE CONTRACTOR SHALL SECURE ALL PERMITS AND PAY ALL FEES FOR PERMITS AND INSPECTIONS FOR THE WORK.
19. ALL FINISHED MATERIALS ON WALLS AND CEILINGS IN CORRIDORS SERVING AS AN EXIT ACCESS SHALL HAVE A FLAME SPREAD RATING OF 0 TO 25. FINISHED MATERIALS ON WALLS AND CEILINGS IN ROOMS SHALL HAVE A FLAME SPREAD RATING OF 26 TO 75. THE CLASSIFICATION OF INTERIOR FINISHES REFERED TO HEREIN CORRESPOND TO FLAME SPREAD RATINGS DETERMINED BY ASTM E84 OR LATEST EDITION.
20. EXPOSED COMBUSTIBLE MATERIALS IN THE CEILING PLENUM SHALL NOT BE PERMITTED.
21. ALL MILLWORK AND CASEWORK SHALL CONFORM TO THE ARCHITECTURAL WOODWORK INSTITUTE CUSTOM GRADE.
22. FIRE SPRINKLER HEADS TO BE LOCATED IN CENTER OF THE CEILING TILE IN WHICH THEY OCCUR, UNLESS NOTED OTHERWISE. (IF PROVIDED)

CODE ANALYSIS PER IBC 2018

PROJECT DATA FOR TENANT IMPROVEMENT AT DAIRY QUEEN
7955 BLUE DIAMOND ROAD, LAS VEGAS, NEVADA

TYPE OF CONSTRUCTION:	TYPE "VB"
OCCUPANCY:	"A-2"
FIRE SPRINKLERS:	YES
LEVELS:	1
AREAS:	
OFFICES,	50 SF
SERV./KITCHEN,	1669 SF
DINING AREA	687 FS
NET AREA,	2406 SF

OCCUPANTS AND EXIT REQMT.

OFFICE 50 SF/100=1 OC.
SERV./KITCHEN, 1669 SF/200=9 OC.
DINING AREA, 687 SF/15=46 OC.

TOTAL OCCUPANT LOAD = 56 OC.

EXIT REQUIRED, 2
EXIT PROVIDED, 4

GENERAL REQUIREMENTS

ALL WORK SHALL CONFORM TO, BUT NOT LIMITED TO, THE LATEST LOCAL ADOPTED EDITION OF THE:

2018 BUILDING ADMINISTRATIVE CODE OF CLARK COUNTY
2018 INTERNATIONAL BUILDING CODE
2018 UNIFORM MECHANICAL CODE
2018 UNIFORM PLUMBING CODE
2017 NATIONAL ELECTRICAL CODE
2018 INTERNATIONAL RESIDENTIAL CODE
2018 INTERNATIONAL FIRE CODE
2018 INTERNATIONAL ENERGY CONSERVATION CODE

IN ADDITION TO THE ABOVE, ALL WORK SHALL CONFORM TO: LOCAL AMENDMENTS, CLARK COUNTY ZONING ORDINANCES AND ALL STATE AND FEDERAL RULES AND REGULATIONS WHICHEVER IS THE MOST STRINGENT.

IMMEDIATLY NOTIFY THE ARCHITECT OF ANY DISCREPANCIES ON THE PLANS, AND DO NOT PROCEED WITH THAT PORTION OF THE WORK, UNTIL THE DISCREPANCIES ARE RESOLVED AND CORRECTED.

SHEET INDEX

ARCHITECTURAL:

DWG. #	SHEET TITLE
A-1.1	KEY SITE PLAN, GEN. NOTES, CODE ANALYSIS AND SHEET INDEX
A-2.1	FLOOR PLAN, CONCRETE FLOOR, DETAILS AND NOTES
A-2.2	REFLECTED CEILING, LIGHTING LAYOUT & SCHEDULE AND NOTES
A-2.3	INTERIOR ELEVATIONS, FINISH SCHEDULE, NOTES AND DETAILS
A-2.4	EQUIPMENT ELECRICAL LAYOUT, NOTED AND DETAILS
A-3.1	LIST AND EQUIPMENT LAYOUT, NOTES AND DETAILD
A-3.2	ROOF AND HOOD LAYOUT AND DETAILS
A-4.1	EQUIPMENT PLUMBING LAYOUT, SCHEDULE, NOTES AND DETAILS

MECHANICAL:

DWG. #	SHEET TITLE
M-0.0	COVER SHEET MECHANICAL
M-0.1	SCHEDULES MECHANICAL
M-2.1	FLOOR PLAN MECHANICAL
M-3.2	PARTIAL ROOF PLAN MECHANICAL

PLUMBING:

DWG. #	SHEET TITLE
P-0.0	COVER SHEET PLUMBING
P-0.1	DIAGRAM, CALCULATIONS PLUMBING
P-1.1	SITE PLAN PLUMBING
P-2.1	FLOOR PLAN PLUMBING
P-3.2	PARTIAL ROOF PLAN MECHANICAL

ELECTRICAL:

DWG. #	SHEET TITLE
E-1	GENERAL NOTES AND SYMBOLS
E-2	GENERAL NOTES AND PANEL SCHEDULES
E-2.1	GENERAL NOTES AND PANEL SCHEDULES
E-4	POWER PLAN
E-4.1	LIGHTING PLAN
E-5	IECC

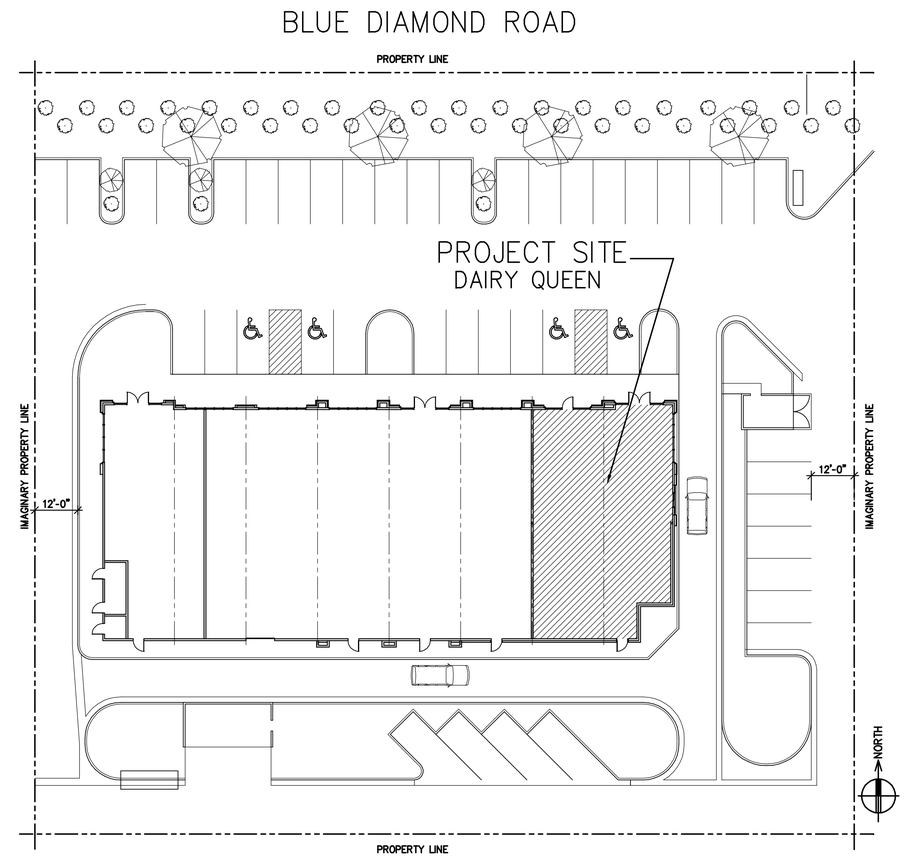

REFERENCE SITE PLAN
1"=20'-0"

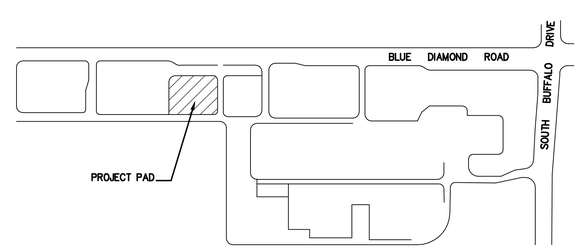

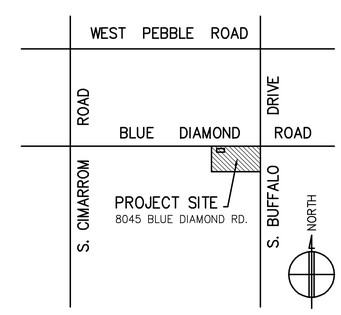

JIM BERENDJI
REGISTERED
No. 1943
11-24-20
ARCHITECT
STATE OF NEVADA

REVISIONS

#	DATE	DESCRIPTION
	10-24-20	ISSUED FOR PLANS CHECK
	12-15-20	REVISED ADDRESS & APN #

GENERAL CONTRACTOR:
RED MESA BUILDERS
NEVADA CONTRACTORS lic#81273
OFFICE: (702) 434-0046 FAX: (702) 434-0051
joe@redmesabuilders.com
4023 W. OQUENDO RD. STE B
LAS VEGAS NV 89118

PROJECT: T. I. FOR DAIRY QUEEN AT
8045 BLUE DIAMOND ROAD, LAS VEGAS, NEVADA
APN, 176-21-610-007

SHEET TITLE: SITE PLAN, GENERAL NOTES AND CODE ANALYSIS

DESIGN CORE
ARCHITECTURE · PLANNING · INTERIORS
JIM BERENDJI, ARCHITECT, A.I.A.
P. O. BOX 778425, HENDERSON, NV 89077
PHONE: (702) 731-0293 berendji@embarqmail.com

DATE: 10-2-20
SCALE: AS NOTED
JOB #: 201001

A-1.1

FILE C:\PROJECTS\JDE-RED-MESA\DAIRYQUEEN-BLUDIAMOND\A-1.1.DWG DATE: 24 NOV 2020 TIME: 2:08 PM

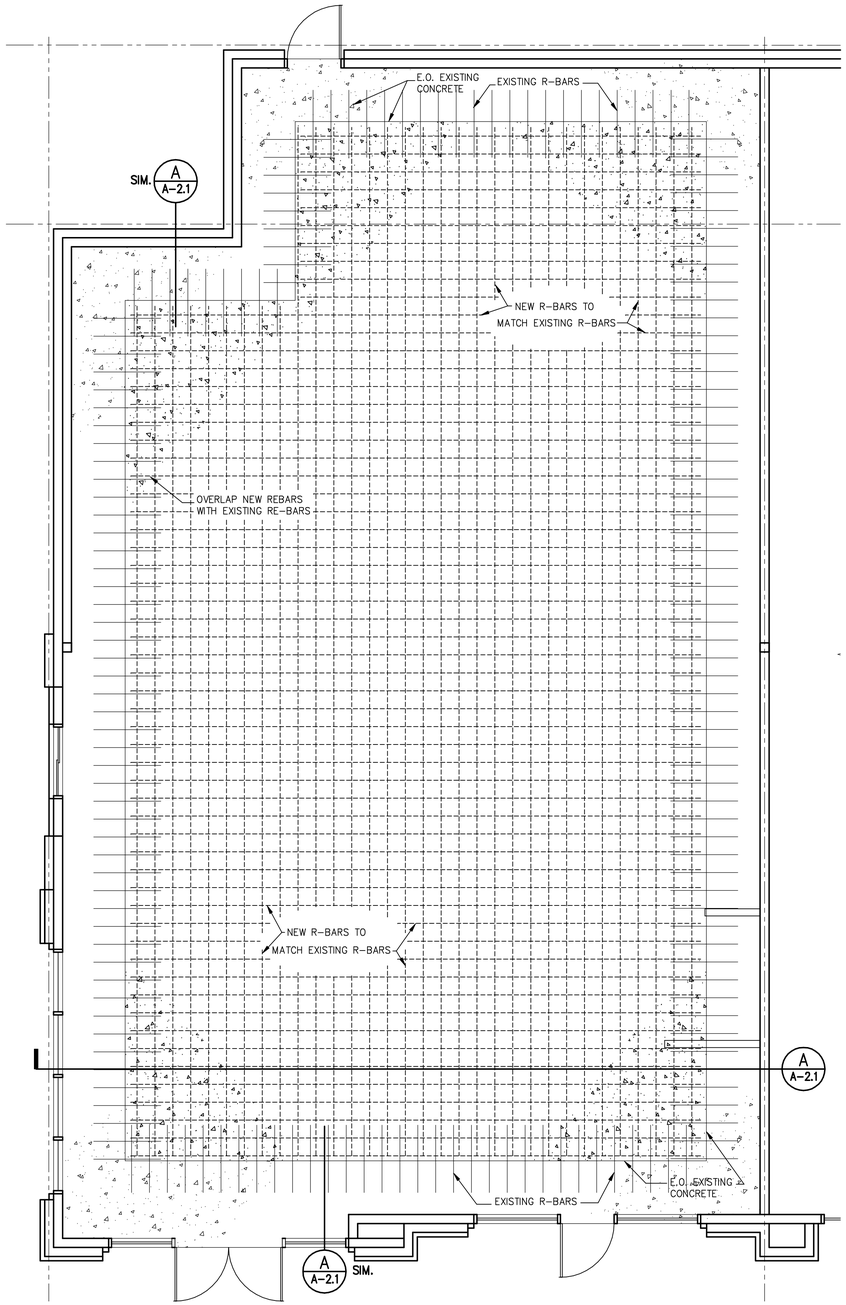

CONCRETE FLOOR PLAN

1/4"=1'-0"

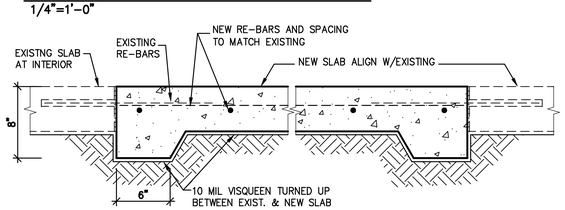

A A-2.1 CONCRETE SLAB DETAIL

1 1/2"=1'-0"

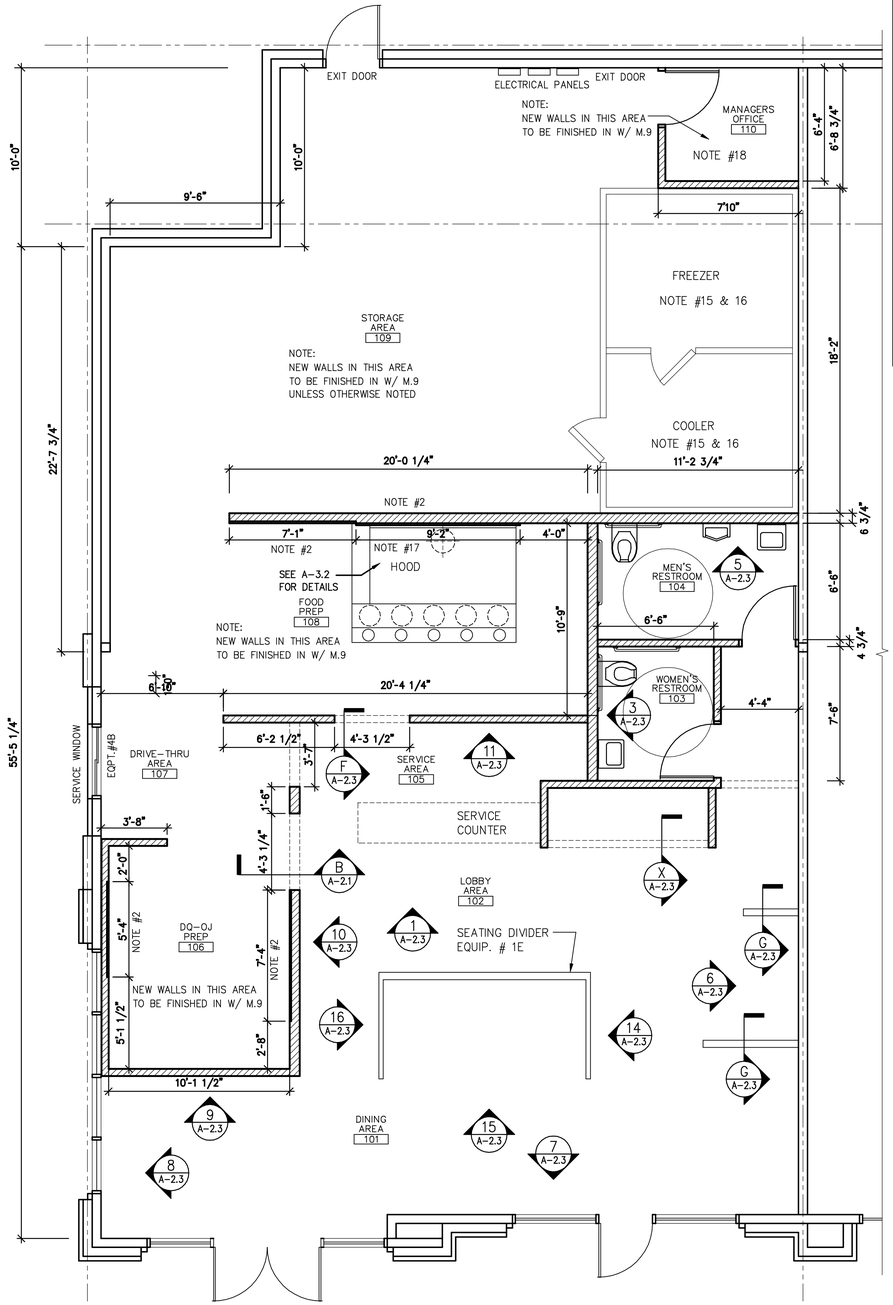

FLOOR PLAN

1/4"=1'-0"

WALL LEGEND

- EXISTING WALLS
- WALL OPENING
- NEW WALLS
- NEW LOW WALLS

FLOOR PLAN NOTES:

THIS PLAB IS SUBJECT TO ALL LOCAL CODES AND VERIFICATION OF DIMENSIONS PRIOR TO START OF ANY CONSTRUCTION

1) ALL GYPSUM BOARDS SHALL BE 5?8" FIRECODE TYPE "X" UNLESS OTHERWISE NOTED.
2) GENERAL CONTRACTOR TO PROVIDE FIRE RATED (IF REQUIRED) 5/8" CDX PLYWOOD BACKING FROM 48" TO 96" A.F.F. – SEE FLOOR PLAN FOR SPECIFIED LOCATIONS AND LENGTHS.
3) ALL DIMENSIONSON PLAN ARE SHOWN AS FACE OF GYP. BD. TO FACE OF GYP. BD. UNLESS NOTED AS CLEAR FINISHED – ALL DROPWALL HEIGHTS SHOWN ON PLAN ARE INTENDED TO BE CLEAR FINISHED HEIGHTS.
4) REFER TO SHEET A–XX FOR INTERIOR ELEVATIONS AND FINISH SPECIFICATIONS.
5) GENERAL CONTRACTOR TO VERIFY ANY/ALL EXISTING CONDITIONS AND DIMENSIONS (IF APPLICABLE).
6) BECAUSE THESE PLANS ARE DESIGNED FROM INFORMATION OBTAINED FROM SOURCES OTHER THAN PROFESSIONAL FIELD ENGINEERS, AND THE EXISTING CONDITIONS HAVE A WIDE VARIANCE, THESE DRAWINGS ARE ONLY PROVIDED TO ASSIST THE OWNER AND THE GENERAL CONTRACTOR IN REMODELING A SPACE THAT WILL SATISFY THE OPERATIONAL CONCERNS EXPRESSED BY THE OWNER/FIELD PERSONNEL. THE RQUIREMENTS SHOWN ARE FOR FOOD SERVICE EQUIPMENT.
7) ALL MECHANICAL/ ELECTRICAL/ REFRIGERATION ETC. ROUGH–INS TO BE COCEALED IN EXISTING WALL OR NEW CONSTRUCTION SO AS NOT TO OBSTRUCT EQUIPMENT INSTALLATION TIGHT TO WALLS.
8) REVIEW ALL MECHANICAL, PLUMBING & ELECTRICAL REQUIREMENTS WITH THE RESPECTIVE SUBCONTRACTORS.
9) ALL NEW MATERIALS, MECHANICAL AND ELECTRICAL EQUIPMENT TO BE INSTALLED IN ACCORDANCE WITH MANUFACTURER'S RECOMMENDATIONS AND SPECIFICATIONS.
10) ALL DIMENSIONS SHOWN ARE TO BE FIELD VERIFIED BY GENERAL CONTRACTOR AND ANY DICREPENCIES REPORTED TO C.B. FOODSERVICE DESIGNS, INC. PRIOR TO ORDERING OF EQUIPMENT.
11) CONTRACTOR TO COORDINATE HIS WORK AND HIS SUBCONTRACTORS WITH EQUIPMENT SUPPLIERS. VERIFY ALL DIMENSIONS WITH EQUIPMENT SUPPLIERS.
12) ALL NEW CONSTRUCTION, MECHANICAL AND ELECTRICAL WORK TO COMPLY WITH ALL LOCAL CODES AND ORDINANCES.
13) GENERAL CONTRACTOR IS SOLELY RESPONSIBLE FOR PRODUCTION OF THE EXISTING BUILDING DURING ALL PHASES OF THE CONSTRUCTION.
14) GENERAL CONTRACTOR IS TO KEEP COSTRUCTION AREA FREE OF DEBRIES DURING CONSTRUCTION AND PROVIDE CLEAN–UP UPON COMPLETION.
15) SEAL WALK–IN BOXES TO FLOOR, WALLS AND CEILING PER LOCAL CODES.
16) NO FLOOR TILES UNDER WALK–IN COOLER/FREEZER BOX – NO BASE TILES AT BUTTED WALLS.
17) PROVIDE 5/8" CEMENT BOARD BEHIND STAINLESS STEEL WALL PANEL OF EXHAUST HOOD – VERIFY REQUIREMENTS.
18) PROVIDE BACKING AT RESTROOM FIXTURES AND BABY CHANGE STATION IF REQUIRED – VERIFY REQUIREMENTS.

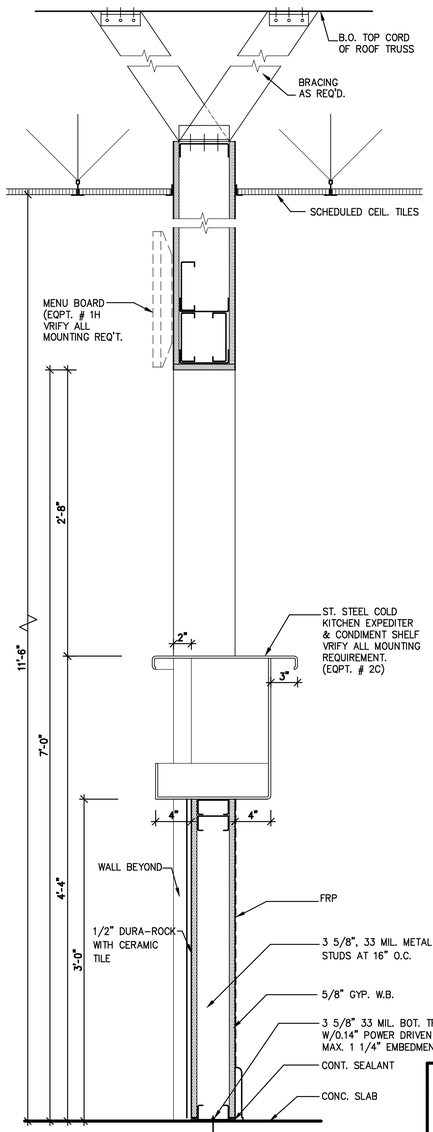

B A-2.1 WALL SECTION

1"=1'-0"

JIM BERENDJI REGISTERED No. 1943 11-24-20 ARCHITECT STATE OF NEVADA

REVISIONS		
#	DATE	DESCRIPTION
	10–24–20	ISSUED FOR PLANS CHECK
	12–15–20	REVISED ADDRESS & APN #

GENERAL CONTRACTOR:
RED MESA BUILDERS
NEVADA CONTRACTORS LIC#0273
OFFICE: (702) 434–0046 FAX: (702) 434–0051
joe@redmesabuilders.com
4023 W. OQUENDO RD. STE B
LAS VEGAS NV 89118

PROJECT: T. I. FOR DAIRY QUEEN AT
8045 BLUE DIAMOND ROAD, LAS VEGAS, NEVADA
APN, 176–21–610–007

SHEET TITLE: FLOOR PLAN, NOTES AND DETAILS

DESIGN CORE
ARCHITECTURE - PLANNING - INTERIORS
JIM BERENDJI, ARCHITECT, A.I.A.
P. O. BOX 778425, HENDERSON, NV 89077
PHONE: (702) 731–0293
berendji@embarqmail.com

DATE: 10–2–20
SCALE: AS NOTED
JOB #: 201001

A–2.1

FILE: C:\PROJECTS\JOE-RED-MESA\DAIRYQUEEN-BLUEDIAMOND\A-2.1.DWG DATE: 24 NOV 2020 TIME: 2:05 PM

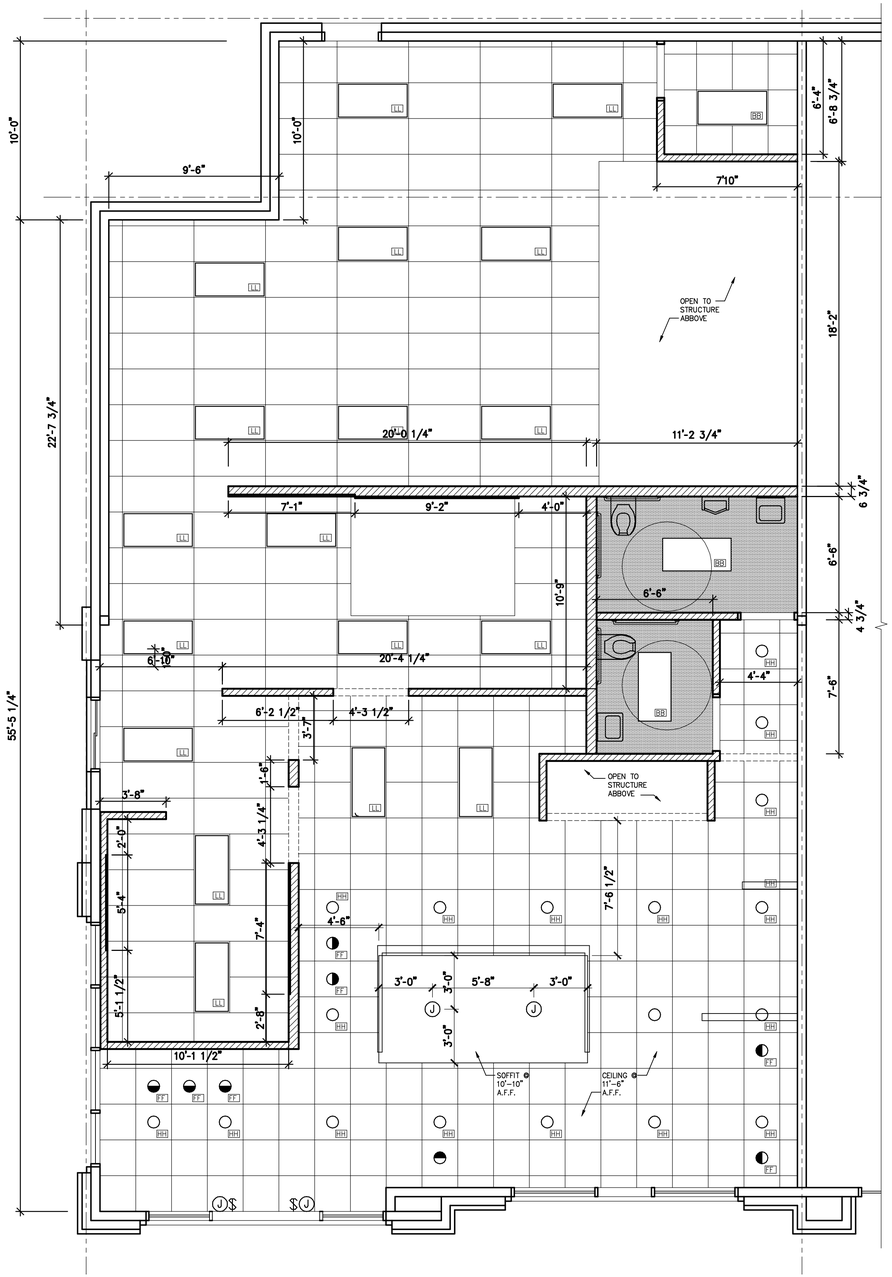

1 A2.2 REFLECTED CEILING PLAN
1/4"=1'-0"

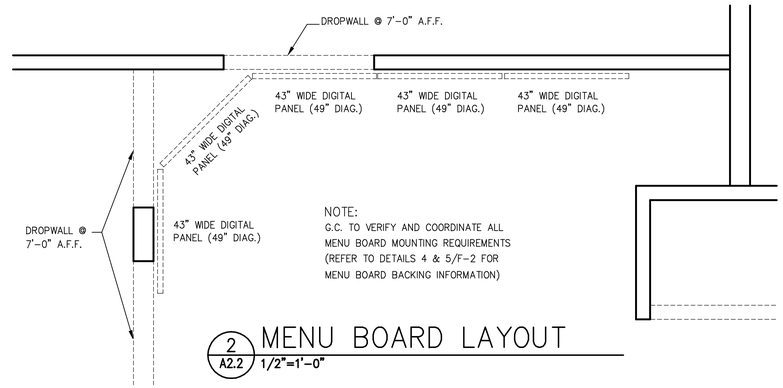

NOTE:
G.C. TO VERIFY AND COORDINATE ALL MENU BOARD MOUNTING REQUIREMENTS (REFER TO DETAILS 4 & 5/F-2 FOR MENU BOARD BACKING INFORMATION)

2 A2.2 MENU BOARD LAYOUT
1/2"=1'-0"

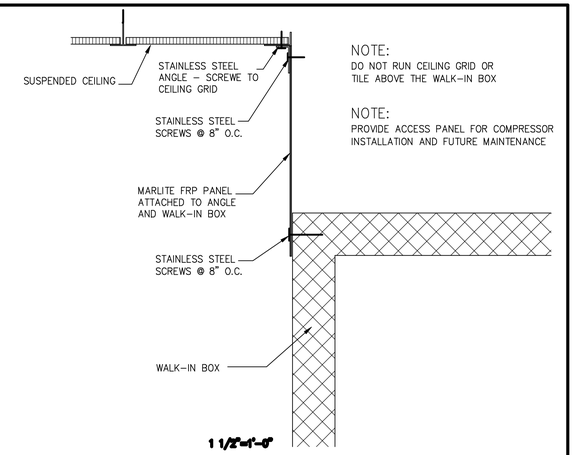

NOTE:
DO NOT RUN CEILING GRID OR TILE ABOVE THE WALK-IN BOX

NOTE:
PROVIDE ACCESS PANEL FOR COMPRESSOR INSTALLATION AND FUTURE MAINTENANCE

3 A2.2 MENU BOARD LAYOUT
1 1/2"=1'-0"

LIGHTING FIXTURE SCHEDUTE (GRILL & CHILL)

PROVIDE FIXTURE SPECIFIED OR EQUAL

SYM	LOCATION	FIXTURE MFGR.	FIXTURE CATALOG NO.	LAMP MFGR.	LAMP CATALOG NO.	LAMP WATTAGE	QUANT. LAMP/FIX.	TYPE OF MOUNT	REMARKS
AA	NOT USED								
AAI	DINING AREA	MORGAN HOPE	MH-PENI-BLK-RS	TCP	LEDIIE26SA1930K	11 W	1	PENDANT	MOUNT BOTTOM OF FIXTURE AT 60" AFF
BB	DINING AREA	CURRENT BY GE	LVT24A040MM835VQLTWHITE	–	–	39.5 W	–	LAY-IN	2X4
BBE	NOT USED								
CC	LIGHT TRACK		4' H TRACK (OR) 8' H TRACK	–	4HT-BK 8HT-BK	–	–	CEILING	USED W/FIXTURES "JJ" & "JJI" VERIFY LENGTHS
DD	NOT USED								
EE	NOT USED								
FF	DINING AREA	LUM-TECH	LH-310 WHITE LT-3565N	GE	35196 LED7XDIMRX1683035 3000K	7 W	1	RECESSED	DIRECTIONAL DOWNLIGHT
GG	NOT USED								
HH	DINING AREA	CURRENT BY GE	LRXR6108835MD/FRAME6R	–		12W	–	RECESSED	DIRECTIONAL DOWNLIGHT
HHE	DINING AREA	CURRENT BY GE	LRXR6108835MD-LRXEMBKIT07/FRAME6R	–		12W	–	RECESSED	AMBIENT DOWNLIGHT W/ EMERGENCY BATTERY BACKUP
JJ	KICH. PASS-THRU	TROY-CSL	KL18141 22"HEAT LAMP120/60/1PH CLEAR BRUSHED METAL	–	SHAT-R-SHIELD017191-250BR40/1 SHATTER RES. CLEAR HEAT LAMP			TRACK	USE WITH TRACK CC 22" CORD LENGTH
JJI	KICH. PASS-THRU	TROY-CSL	KL18142 74"HEAT LAMP 120/60/1PH CLEAR BRUSHED METAL	–	SHAT-R-SHIELD017191-250BR40/1 SHATTER RES. CLEAR HEAT LAMP			TRACK	USE WITH TRACK CC 74" CORD LENGTH
KK	NOT USED								
LL	KICH. CHEN/STR.	LSI INDUSTRIES	ELFP24 LED40 UE	–	–	45W		LAY-IN	2X4 W/ACRYLIC LENS
LLE	KICH. CHEN/STR.	LSI INDUSTRIES	ELFP24 LED40 UE EM			45W		LAY-IN	2X4 W/ACRYLIC LENS & EMERGENCY BATTERY BACKUP
MM	NOT USED								
NN	NOT USED								
P	NOT USED								
PP	NOT USED								
Q	NOT USED								
QQ	NOT USED								
RR	EXIT. EMERGENCY	EXITRONIX	VLED-U-WH-EL90			2.5W		WALL/CEILING	LOCATIONS TO COMPLY WITH PREVALING CODES
SS1	NOT USED								
SS2	NOT USED								
TT	NOT USED								

NOTES:
* WIRING METHODE FOR ALL RECESSED LIGHT FIXTURES SHALL BE CONDUIT (UNLESS OTHRWISE NOTED), J-BOXES WITH FLEX DROPS (PER ARTICLE 410, 370, 350, 300 PER LATEST NEC).
* FIXTURES & VARIOUS ELECTRICAL DEVICES SHALL BE INSTALLED IN CEILING WITH PROPER SELF SUPPORTING METHODE. OPPOSITE CORNERS OF 2X4 FIXTURES TO BE SUPPORTED INDEPENDENTLY WITH WIRES FROM CEILING STRUCTURE(PER NEC)
* VERIFY WITH LOCAL GOVERNING OFFICIALS THE LOCATIONS OR ADDITIONS OF EMERGENCY LIGHTING AND PROVIDE AS REQUIRED.
* FOR PRODUCT AND PURCHASING INFORMATION CONTACT LATRICIA ALLISON AT HJC CORPORATION – 800- 459-7099

ELECTRICAL/LIGHTING PLAN NOTES

1) ALL ELECTRICAL EQUIPMENT SHALL BE UL APPROVED AND ALL INCANDESCENT LIGHTING FIXTURES WIRING SHALL BE 150C . RATED. ELECTRICAL CONTRACTOR TO PROVIDE TEMPORARY LIGHTING AND POWER AS REQUIRED TO FACILIATE THE WORK DURING CONSTRUCTION AS WELL ASACQUIRE ALL PERMITS AND PROGRESS INPECTIONS AS REQUIRED.
2) IF EXIT LIGHTS ARE REQUIRED, THEY ARE TO BE PROVIDED BY THE ELECTRICAL CONTRACTOR. THEY ARE TO BE AN APPROVED TYPE WIRED ON A DUAL CIRCUIT WITH 120 VOLT CIRCUIT FRPM PANEL AND AN EMERGENCY CIRCUIT FED FROM A BATTERY UNIT EXIT AS FOLLOWS, EXIT LIGHT ONLY – "DUAL LITE EXQUISITE" WALL MOUNT SIGN WITH EPP POWER PACK (RED LETTERS) IF EMERGENCY LIGHT(S) IS TO BE USED, ADD RPL REMOTE LITE PACK(S) IF REQUIRED. (EXIT SIGNS TO HAVE MIN. 1 1/2 HOUR BATTERY PACK-UP POWER.)
3) ELECTRICAL CONTRACTOR TO FIELD VERIFY ALL EXISTING UTILITIES, CONDITIONS AND DIMENSIONS PRIOR TO CONSTRUCTION AND BIDDING.
4) ELECTRICAL CONTRACTOR TO PROVIDE SMOKE AND HEAT DETECTORS, FIRE ALARM PANEL, ETC., PER LOCAL REQUIREMENTS
5) NOT USED IN THIS PLAN.
6) EMERGENCY LIGHTING SHALL BE PROVIDED TO MEET ALL LOCAL AND STATE SAFETY REGULATIONS. ALL LOW VOLTAGE WIRING SHALL BE 1/2" C. AND 2 #10 THW. (EMERGENCY LIGHTING TO HAVE MIN. 1 1/2 HOUR BATTERY BACK-UP POWER).
7) FURNISH AND INSTALL J-BOX AND DICONNECT SWITCH INACCESSIBLE CEILING SPACE AND CONNECT TOEXTERIOR SIGNAGE – VERIFY ALL REQ'MNTS). SIGNAGE INSTALLED BY G.C.
8) NOT USED IN THIS PLAN.
9) PROVIDE POWER FOR VIDEO MONITOR SYSTEM – LOCATION TO BE VERIFIED PER TENANT / OWNER.
10) G.C. TO PROVIDE BACKING ABOVE CEILING OR IN WALL FOR MOUNTING VIDEO DISPLAY MONITOR BRACKETS – VERIFY WEIGHT & LOCATION OF MONITORS W/ OWNER.
11) ELECTRICAL CONTRACTOR TO PROVIDE POWER FOR UPLIGHT AND CAKE FREEZER LIGHTCOVE – E.C. TO VERIFY EXACT SPECIFICATION OF LIGHT FIXTURE TO BE USED (VERIFY USE OF SWITCH W/ OWNER) – VRIFY ALL REQ'MNTS.
12) ELECTRICAL CONTRACTOR TO PROVIDE DATA BOX W/ 3/4" CONDUIT STUBBED ABOVE CEILING BEHIND MONITOR PANEL OF MENU SYSTEM – VERIFY EXACT LOCATION & ALL REQUIREMENTS.
13) ELECTRICAL CONTRACTOR TO MOUNT OUTLETS FOR MENU BOARD HORIZONTALLY – VERIFY ALL REQUIREMENTS.

ELECTRICAL LEGENG

SYM	DESCRIPTION
	DUPLEX RECETACLE OUTLET – FLUSH MOUNT (20 AMP RATED)
	SOLATED GROUND RECETACLE (NEMA 5-20R-IG)
J	JUNCTION BOX, FLUSH MOUNT, 20 AMP RATED
D	DATA BOX, FLUSH MOUNT
AA	LIGHT FIXTURE – SEE LIGHTING SCEDULE
	LIGHT FIXTURE – W/ PRISMATIC LENS
	RECESSED DOWN LIGHT
	WALL WASH LIGHT

JIM BERENDJI REGISTERED No. 1943 11-24-20 ARCHITECT STATE OF NEVADA

REVISIONS

#	DATE	DESCRIPTION
	10-24-20	ISSUED FOR PLANS CHECK
	12-15-20	REVISED ADDRESS & APN #

GENERAL CONTRACTOR:
RED MESA BUILDERS
NEVADA CONTRACTORS lic#81273
OFFICE: (702) 434-0046 FAX: (702) 434-0051
joe@redmesabuilders.com
4023 W. OQUENDO RD. STE B
LAS VEGAS NV 89118

PROJECT: T. I. FOR DAIRY QUEEN AT
8045 BLUE DIAMOND ROAD, LAS VEGAS, NEVADA
APN, 176-21-610-007

SHEET TITLE: REFLECTED CEILING PLAN LIGHTING AND NOTES

DESIGN CORE
ARCHITECTURE · PLANNING · INTERIORS
JIM BERENDJI, ARCHITECT, A.I.A.
P. O. BOX 778425, HENDERSON, NV 89077
PHONE: (702) 731-0293 berendji@embarqmail.com

DATE: 10-2-20
SCALE: AS NOTED
JOB #: 201001

A-2.2

FILE: C:\PROJECTS\JDE-RED-MESA\DAIRYQEEN-BLUDIAMOND\A-2.2.DWG DATE: 24 NOV 2020 TIME: 2:06 PM

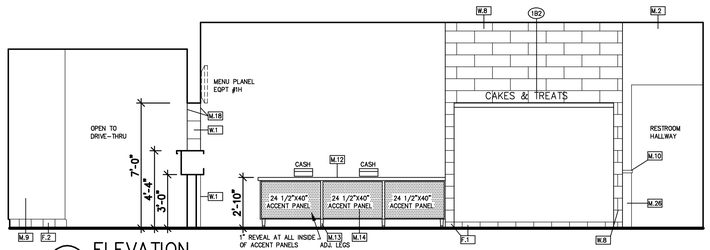

1 A-2.3 ELEVATION
1/4"=1'-0"

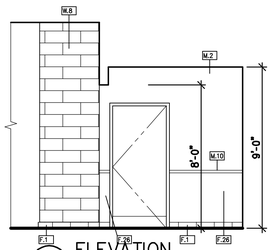

2 A-2.3 ELEVATION
1/4"=1'-0"

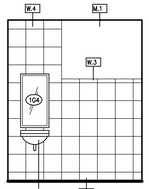

3 A-2.3 ELEVATION
1/4"=1'-0"

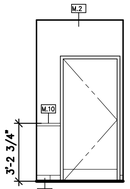

4 A-2.3 ELEVATION
1/4"=1'-0"

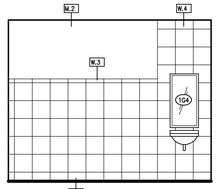

5 A-2.3 ELEVATION
1/4"=1'-0"

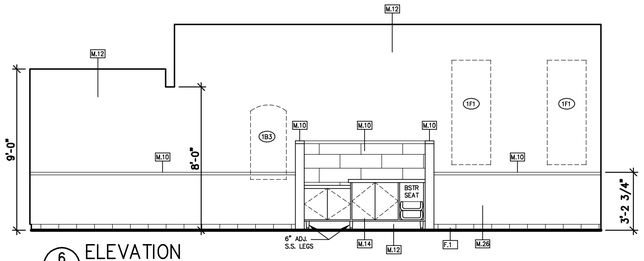

6 A-2.3 ELEVATION
1/4"=1'-0"

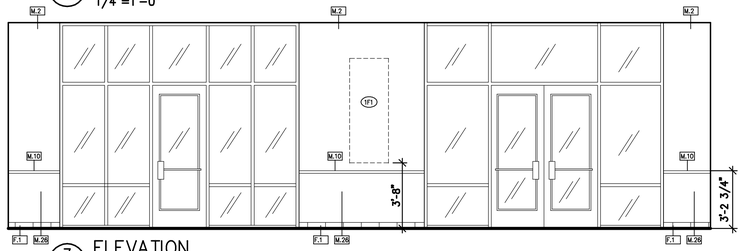

7 A-2.3 ELEVATION
1/4"=1'-0"

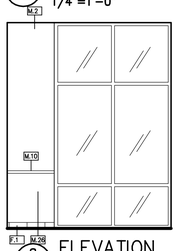

8 A-2.3 ELEVATION
1/4"=1'-0"

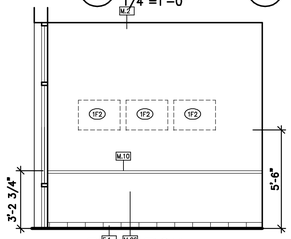

9 A-2.3 ELEVATION
1/4"=1'-0"

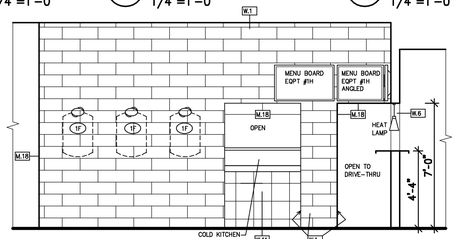

10 A-2.3 ELEVATION
1/4"=1'-0"

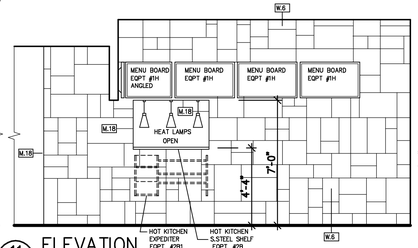

11 A-2.3 ELEVATION
1/4"=1'-0"

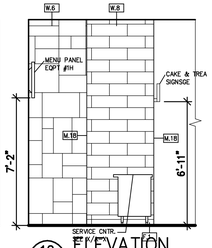

12 A-2.3 ELEVATION
1/4"=1'-0"

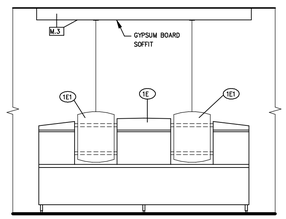

13 A-2.3 ELEVATION
1/4"=1'-0"

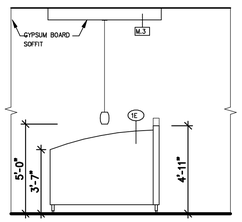

14 A-2.3 ELEVATION
1/4"=1'-0"

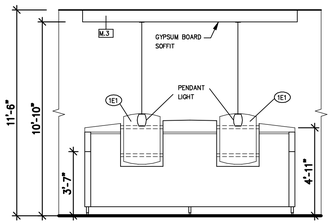

15 A-2.3 ELEVATION
1/4"=1'-0"

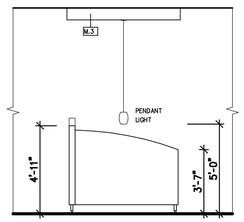

16 A-2.3 ELEVATION
1/4"=1'-0"

DECOR FINISH SCHEDULE (GRILL & CHILL)

FLOOR AND BASE

F.1 FOOR TILE (PUBLIC AREAS)
*** MANUFACTURER , MARAZZI
SERIES: WALNUT CANYON #JHC2
COLOR: WARM COCOA VMPL
SIZE: 13"X13" (CUT TO 4" TALL WHEN USED AS A BASE)
GROUT: LATICRETE SPECTRALOCK – ESPRESSO #59

F.2 FOOR TILE (WORK AREAS)
*** MANUFACTURER , METROPOLITAN CERAMICS
SERIES: QUARRY BASICS
COLOR: PLAZA GRAY #505
SIZE: 8"X8" (W/ MATCHING 6"X8" COVE BASE)
GROUT: LATICRETE SPECTRALOCK – ESPRESSO #59

F.1 FOOR TILE BASE (RESTROOMS)
*** MANUFACTURER , MARAZZI
SERIES: WALNUT CANYON #UL56
COLOR: WARM COCOA VMPL
SIZE: 13"X13"
GROUT: LATICRETE SPECTRALOCK – ESPRESSO #59

WALL TILES

W.1 WALL TILE:
*** MANUFACTURER , STONEPEAK CERAMICS
SERIES: LIMESTONE
COLOR: EXTRA IVORY
SIZE: 12"X24"
GROUT: LATICRETE PERMACOLOR #85 ALMOND (1/4 JOINT)

W.2 WALL TILE:
*** MANUFACTURER , STONEPEAK CERAMICS
SERIES: LIMESTONE
COLOR: WALNUT #USHI224003
SIZE: 12"X24"
GROUT: LATICRETE PERMACOLOR #30 SAND BEIGE (1/4 JOINT)

W.3 WALL TILE:
*** MANUFACTURER , MARAZZI
SERIES: WALNUT CANYON #JHC2
COLOR: WARM COCOA VMPL
SIZE: 3"X13" BULLNOSE
GROUT: LATICRETE PERMACOLOR #85 ALMOND (1/4 JOINT)

W.4 WALL TILE:
*** MANUFACTURER , MARAZZI
SERIES: SLATE NATURAL STONE
COLOR: AMARILLO MRT5 MATTE NATURAL
SIZE: 12"X12"
GROUT: LATICRETE PERMACOLOR #85 ALMOND (1/4 JOINT)

W.6 WALL TILE:
*** MANUFACTURER, DAL TILE
SERIES: GRANITI
COLOR: INDIAN MULTI-COLOE
SIZE: 16"X24", 16"X16", 8"X16", 8"X8"
GROUT: LATICRETE PERMACOLOR #45 RAVEN (1/4 JOINT)
NOTE: TO BE SEALED W/MFR'S RECOMMENDED SEALING/COLOR ENHANCING MATERIAL

W.8 WALL TILE:
*** MANUFACTURER, EPOCA
SERIES: DESIGN POSITIVE BLUE 01(ME.DP,BLU.0820)
COLOR: BLU GLAZED CERAMIC
SIZE: 8"X20" RUNNING BOND PATTERN
GROUT: LATICRETE PERMACOLOR #85 ALMOND (1/4 JOINT)

W.11 WALL TILE:
*** MANUFACTURER, INTERCERAMIC
SERIES: RETRO
COLOR: SUNDANCE
SIZE:12"X12", STACKED/GRID
GROUT: LATICRETE PERMACOLOR #85 (1/4 JOINT)
GROUT COLOR ALMOND #85

NOTE:
ANY MISSING SEQUNTIAL NUMBERS (#), ARE NOT USED

WALL & MISC.

M.1 PAINT:
MANUFACTURER, BENJAMIN MOORE
COLOR: BARLEY BEIGE #1066
PRODUCT, ECO SPEC WB INTERIOR LATEX EGGSHELL #374
PRIMER, ECO SPEC WB INTERIOR LATEX PRIMER #372

M.2 PAINT:
MANUFACTURER, BENJAMIN MOORE
COLOR: ETRUSCAN AF – 355
PRODUCT, ECO SPEC WB INTERIOR LATEX EGGSHELL #374
PRIMER, ECO SPEC WB INTERIOR LATEX PRIMER #372

M.3 PAINT:
MANUFACTURER, BENJAMIN MOORE
COLOR: CALIENTE AF – 290
PRODUCT, AURA INTERIOR EGSHELL #524
PRIMER, FIRST COAT OF AURA INTERIOR EGGSHELL #524

M.6 PAINT:
MANUFACTURER, BENJAMIN MOORE
PRIMER, ECO SPEC WB INTERIOR LATEX PRIMER #372

M.9 F.R.P.
*** MANUFACTURER, SEQUENTIA
COLOR, WHITE
FINISH, PEBBLED
NOTE: W/ MATCHING TRIM PIECES

M.10 MILLWORK
*** EXPREMIUM GRAGE MAPLE
FINISH NATURAL W/CLEAR POYURETHANE
VENDOR, LOCAL PURCHASE

M.12 SOLID SURFACE COUNTER TOP:
MANUFACTURER, CORIAN
SIZE, 1/2" THICK
COLOR, MAUI (MATT FINISH)

M.13 LAMINATE, FRONT COUNTER FACE
MANUFACTURER, WILSONART
COLOR, #4623-60 GRAPHITE NEBULA

M.14 LAMINATE,
MANUFACTURER, WILSONART
COLOR, #4846-60 MORRO ZEPHYR

M.16 TOILET PARTITIONS:
MANUFACTURER, BRADLEY
STYLE: SENTINEL OVERHEAD BRACED SERIES, 400
MATERIAL, BAKED ENAMEL
COLOR, TOFFEE #8517
VENDOR, HJC

M.18 TRIM AT CERMIC TILE WALL CORNERS:
*** SCHLUTER "RHONDEC-AGC" METAL TRIM PLISHED CHROME ANODIZED ALUMINUM SIZE AS REQUIRED BY THE LOCATION & TILE BEING USED – PROVIDE ASSOCIATED ACCESSRIES AS REQUIRED

M.22 OPTIONAL WINDOW SHADE:
HEAD FRAME MOUNTED W/ SNAP-ON FACIA – ANODIZED CASSETTE SHEARWEAVE 4000 SERIES FABRIC– 5% OPENNESS
COLOR, PEBBLESTONE Q1240
VENDOR, CE CONTRACT
PROVIDED AND INSTALLED BY G,C,

WALL & MISC.

M.24 CEILING TILE & GRID
*** MANUFACTURER, ARMSTRONG
STYLE, FINE FISSURED SQUARE LAY-IN #1728
SIZE, 24"X24"X5/8"
COLOR, ADOBE
GRID, PRELUDE XL 15/16" EXPOSED TEE GRID
GRID COLOR, ADOBE

M.26 WAINSCOT:
*** MANUFACTURER, FORBO FLOORING SYS.
MARMOLIUM WALL PANEL SYSTEM
COLOR, BARLEY #2707
SERIES, REAL
SIZE, 38"X96" PANEL (HORIZONTAL)
NOTE: PROVIDE ALUMINUM "J" CHANELS SPLICE "T" & CORNERS

M.28 CEILING TILE & GRID
*** MANUFACTURER, ARMSTRONG
STYLE, VINYLCLAD LAY-IN CLASS "A" FIRE RESISTANT #BP670
SIZE, 24"X48"X5/8"
COLOR, WHITE
GRID, PRELUDE XL 15/16" EXPOSED TEE GRID
GRID COLOR, WHITE

NOTE:
*** INDICATES A FINISH THAT IS AVAILABLE FROM HJC CORPORATION CONTACT LATRICIA ALLISON @ # 800/ 459–7099 (X5917) OR
EMAIL ADDRESS: dq@kjlnc>com

FINIH NOTES:

1) FIELD VERIFICATION IS REQUIRED FOR QUANTITIES OF AL MATERIALS PRIOR TO ORDERING AND INSTALLING. THIS INCLUDES FLOOR AND WALL TILES AND PAINT (DO NOT SCALE DRAWINGS).
2) UPON AWARD OF CONTRACT CONTRACTOR TO ORDER & CONFIRM DELIVERY DATE OF ORDER.
3) ALL MATERIALS LISTED TO BE AS SPECIFIED OR APPROVED ALTERNATES. ANY PROPOSED ALTERNATES TO BE SUBMITTED TO IDQ ARCH/CONST. DEPT. FOR REVIEW OF COLOR AND QUALITY PRIOR TO ORDERING MATERIAL.
4) ALL MATERIALS LISTED TO BE SUPPLIED AND INSTALLED BY THE GENERAL CONTRACTOR, UNLESS OTHERWISE NOTED.
5) CONTRACTOR TO PHYSICALLY RECHECK ALL MEASURMENTS PROVIDED IN THE DRAWINGS.
6) CONTRACTOR TO PREPARE A PACK OF SIGNIFICANT SIZE LEFTOVERS WHICH WILL REMAIN ON SITE FOR FUTURE REPAIRS AND PATCHING, (CONFIRM QUANTITY WITH CLIENT 10% OVERAGE IS STANDARD).
7) USE "4XLT" GREY THINSET BY LATICRETE FOR ALL FLOOR AND WALL TILE INSTALLATION UNLESS OTHERWISE NOTED.
8) FLOOR FINISHES T EXTEND COMPLETELY UNDER MILLWORK.
9) WHEN A CHANGE IN FLOOR FINISH OCCURS AT A DOORWAY, THE SEAM IS TO BE CENTERED UNDER THE DOOR IN THE CLOSED POSITION.
10) ALL FLOORING MATERIAL TO HAVE MANUFACTURERS RECOMMENDED FINISH APLLIED AFTER INSTALLATION AND PROPER CARE AND MAINTENANCE ISTRUCTIONS TO BE ISSUED TO THE CLIENT.
11) ALL FLOORING FINISHES TO BE INSTALLED AFTER PARTITIONS HAVE BEEN CONSTRUCTED.
12) ENSURE SUB FLOOR IS PROPERLY PREPARED FOR INSTALLATION OF SPECIFIED FLOOR FINISH.
13) ALL FLOOR FINISHES TO BE PROTECTED FROM DAMAGE BY TRADES AFTER INSTALLATION. ANY DAMAGE TOBE REPAIRED AT NO COST TO THE OWNER.
14) ANY KILN RELEASE RESIDUE MUST BE CLEANED OFF TILE BEFORE SETTING.
15) ALL MATERIALS FOR INSTALLATION AND FINISHING AS PER MANUFACTURER'S INSTRUCTIONS, RECOMMENDATIONS AND SPECIFICATIONS FOR THE APPLICATION AND INTENDED USAGE.
16) ALL DOOR FRAMES AND BASE MUST BE PROTECTED WITH APPROPRIATE MATERIAL TO AVOID DAMAGE DURING INSTALLATION OF FLOORING MATERIALS. THE PROTECTION MATERIAL AND METHODE OF ADHESION SHOULD NOT DAMAGE THE FINISH WHEN REMOVED. DAMAGE DONE TO COMPLETED WORK TO BE REPAIRED AT NO COST TO THE OWNER.
17) HOLLOW METAL DOOR FRAMES FOR INTERIOR DOORS IN DINING/RESTROOM AREAS TO BE PAINTED W/ "M.1"
18) NEW H.V.A.C. DIFFUSERS TO MATCH COLOR OF SURROUNDING AREA CEILING GRID.

NOTE:
TILE INSTALLER TO USE FINISH "M.18" AT ALL OUTSIDE TILE WALL CORNERS – (VERIFY ALL REQUIREMENTS).

NOTE:
RECOMMENDATION FOR FINISHING OF ALL MILLWORK,
(1) COAT OF SEALER & (2) COAT OF POLYURETHANE – MINIMUM.
CONTRACTOR TO INSPECT FINISH & PROVIDE ADDITIONAL COATS AS REQUIRED.

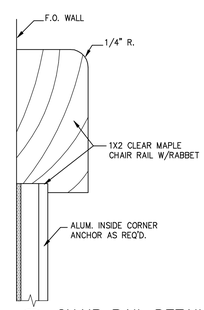

B A-2.3 CHAIR RAIL DETAIL
1"=1'-0"

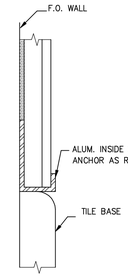

A A-2.3 BASE DETAIL
1"=1'-0"

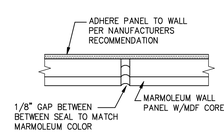

C A-2.3 CHAIR RAIL DETAIL
1"=1'-0"

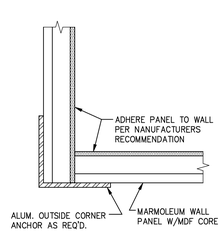

D A-2.3 CORNER DETAIL
1"=1'-0"

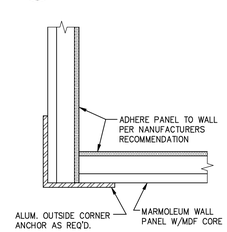

E A-2.3 CORNER DETAIL
1"=1'-0"

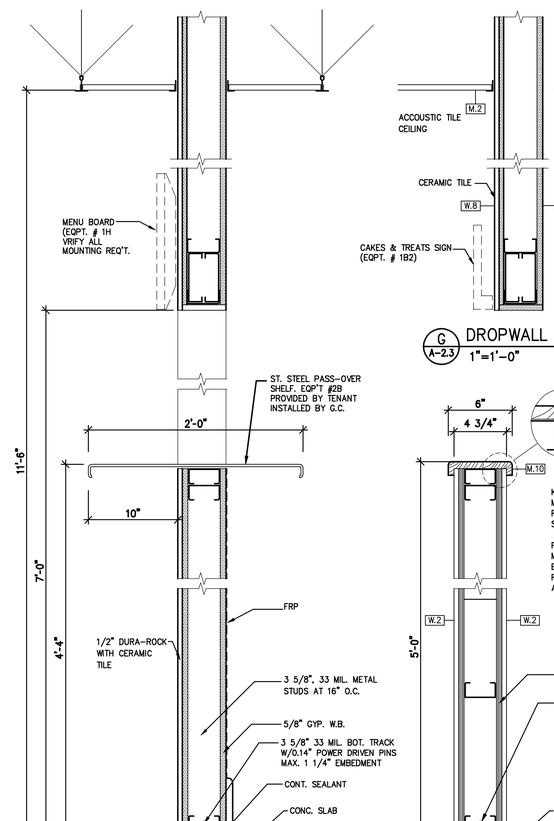

F A-2.3 WALL DETAIL
1"=1'-0"

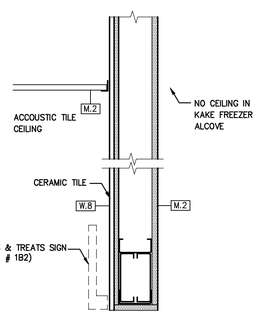

G A-2.3 DROPWALL DETAIL
1"=1'-0"

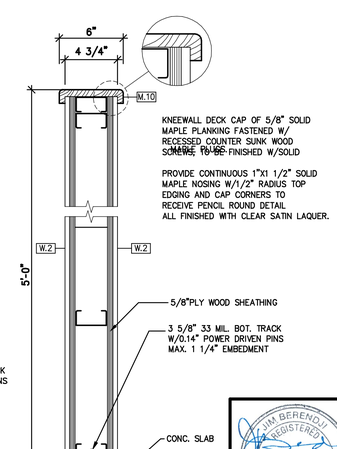

H A-2.3 KNEEWALL DETAIL
1"=1'-0"

JIM BERENDJI
REGISTERED
No. 1943
11-24-20
ARCHITECT
STATE OF NEVADA

REVISIONS

#	DATE	DESCRIPTION
	10-24-20	ISSUED FOR PLANS CHECK

GENERAL CONTRACTOR:
RED MESA BUILDERS
NEVADA CONTRACTORS lic#51273
OFFICE: (702) 434-0046 FAX: (702) 434-0051
joe@redmesabuilders.com
4023 W. QQUENDO RD. STE B
LAS VEGAS NV 89118

PROJECT: T. I. FOR DAIRY QUEEN AT
8045 BLUE DIAMOND ROAD, LAS VEGAS, NEVADA
APN, 176-21-610-007

SHEET TITLE: INTERIOR ELEVATIONS, FINISHES NOTES AND DETAILS

DESIGN CORE
ARCHITECTURE · PLANNING · INTERIORS
JIM BERENDJI, ARCHITECT, A.I.A.
P. O. BOX 778425, HENDERSON, NV 89077
PHONE: (702) 731-0293
berendji@embarqmail.com

DATE: 10-2-20
SCALE: AS NOTED
JOB #: 201001

A-2.3

FILE: C:\PROJECTS_JOE-RED-MESA\DAIRYQUEEN-BLUEDIAMOND\A-2.3.DWG DATE: 24 NOV 2020 TIME: 2:06 PM

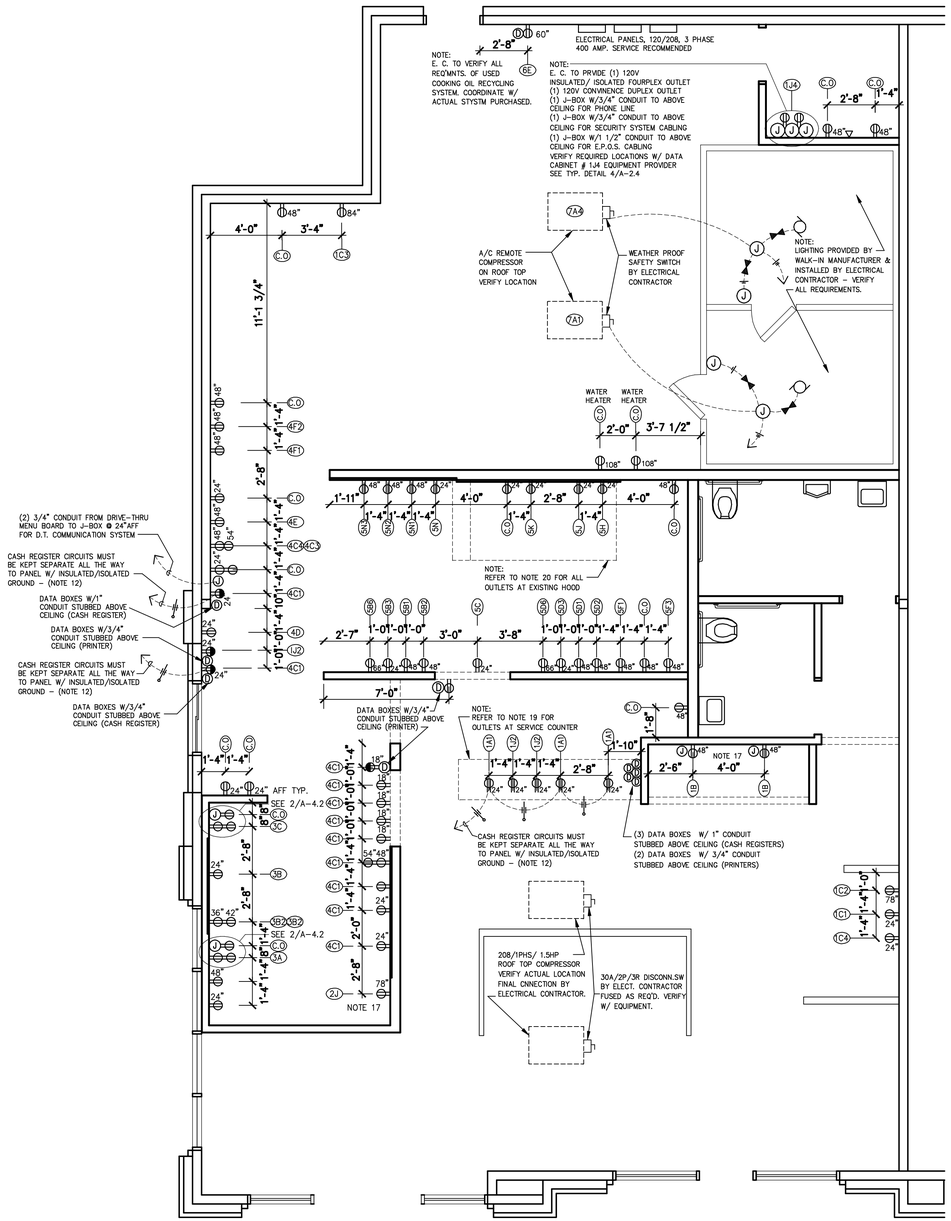

1 A2.4 ELECTRICAL POWER PLAN
1/4"=1'-0"

NOTE:
SEE ELECTRICAL DRAWINGS FOR PANEL SCHEDULES AND COMPLETE T.I. ELECTRICALS.

ELECTRICAL LEGENG	
SYM	DESCRIPTION
	DUPLEX RECETACLE OUTLET - FLUSH MOUNT (20 AMP RATED)
J	JUNCTION BOX, FLUSH MOUNT, 20 AMP RATED
D	DATA BOX, FLUSH MOUNT
	SPECIAL PURPOSE OUTLET, FLUSH MOUNT
	SOLATED GROUND RECETACLE (NEMA 5-20R-IG)
	MOTOR CONNECTION
	DISCONNECT SWITCH
	TELEPHONE OUTLET
	INSULATED / ISOLATED GROUND
	SEAL TIGHT PER NEC ART. 300-7A

ELECTRICAL/LIGHTING PLAN NOTES

1) REFER TO EQUIPMENR SCHEDULE FOR ELECTRICAL SPECIFICATION OF EQUIPMENT PROVIDED BY OWNER / TENANT.
2) ELECTRICAL CONTRACTOR SHALL FURNISH, INSTALL AND PROVIDE FOR THE COMPLETION OF THE WORK. ALL WIRE, WIRE WAY, CONDUIT, CONNECTORS, OUTLETS, ETC. NECESSARY TO ACHIEVE A COMPLETE ELECTRICAL INSTALLATION. ALL ELECTRICAL WORK TO BE IN COMPLIANCE WITH ALL LOCAL, STATE AND FEDERAL CODES. ANY MODIFICATION REQUIRED TO THESE PLANS FOR PROPER COMPLIANCE SHALL BE THE RESPONSIBILITY OF THE ELECTRICAL CONTRACTOR.
3) ELECTRICAL CONTRACTOR SHALL PROVIDE CIRCUIT DIRECTORY WITH A TYPED CIRCUIT DESIGNATION CARD UNDER PLASTIC COVER ONTHE SIDE OF EACH PANEL DOOR. INSTALL NAME PLATES FOR ALL DISCONNECT SWITCHES AND PANEL BOARDS.
4) ALL WIRING MUST BE IN CONDUIT - MINIMUM SIZE 1/2". FLEXIBLE CONDUIT TO BE USED ONLY FOR SHORT FINAL CONNECTIONS. NO CONDUIT IS TO RUN IN DUCTWORK. ALL ELECTRICAL EQUIPMENT EXPOSED TO WATHER (SUCH AS ONTHE ROOF) SHALL BE WATHERPROOF. ELECTRICAL SYSTEM SHALL MAINTAIN CONTINUOUS GROUND.
5) ALL CONDUIT EXPOSED TO HEATHER SHALL BE GALVANIZED HEAVY WALL STEEL CONDUIT. ALL UNDER FLOOR CONDUIT SHALL BE GALVANIZED HEAVY WALL STEEL CONDUIT OR PVC-40 AS RECOMMENDED BY LOCAL AUTHORITY.
6) ALL ELECTRICAL EQUIPMENT SHALL BE U.L. APPROVED. ALL WIRING FOR INCANDESSENT LIGHTINTG FIXTURES SHALL BE 150 C. RATED. ELECTRICAL CONTRACTOR TO PROVIDE TEMPORARY LIGHTING AND POWER AS REQUIRED TO FACILITATE THE WORK DURING CONSTRUCTION AS WELL AS ACCQUIRE ALL PERMITS AND PROGRESS INSPECTIONS AS REQUIRED
7) ALL CORE BORING, TRENCHING AND PATCHING OF THE CONCRETE FLOOR SLAB SHALL BE BY GENERAL CONTRACTOR.
8) ALL CUTTING AND PATCHING OF THE ROOF SHALL BE DAONE BY THE OWNER'S ROOFING CONTRACTOR AND PAID FOR BY THE TENANT'S ELECTRICAL CONTRACTOR. (ONLY APPLICABLE FOR MALL AND STRIP CENTER LOCATIONS).
9) PROVIDE ANY ADDITIONAL CONVINIENCE OUTLETS PER CODE OR TENANT / OWNER.
10) ELECTRICAL CONTRACTOR TO FIELD VERIFY ALL EXISTING UTILITIES, CONDITIONS AND DIMENSIONS PRIOR TO BIDDING AND CONSTRUCTION.
11) COORDINATE ALL ELECTERICAL WORK WITH COUNTER MANUFACTURER AND EQUIPMENT SPPLIER.
12) PROVIDE FOR CASH REGISTER/VIDEO MONITOR SYSTEM, INSULATED/ISOLATED GROUND IN SEPARATE CONDUIT AS SHWOWN. PROVIDE 3 - #12 THW IN 1 1/2" CONDUIT. RECEPTACLE SHALL BE "NEMA" 5-20R-IG. ELECTRICAL CONTRACTOR SHALL VERIFY WITH OWNER/TENANT ALL WIRING RELATED TO CASH REGISTERS AND FOR ANY CHANGES OR ADDITIONS BASED ON ACTUAL UNIT USED - SEE SHEET A-XX FOR VIDEO MONITOR SYSTEM LOCATIONS).
13) ELECTRICAL CONTRACTOR TO PROVIDE AN EMPTY BOX AND 1/2 " CONDUIT FOR PHONE SERVICE. LOCATE PER OWNNER.
14) OUTLET LIGHTS SHOWN ON THE PLAN ARE TO CENTER OF RECEPTACLES.
15) ELECTRICAL CONTRACTOR TO PROVIDE THE PANELS, BREAKERS/FUSES AND DISCONNECTS. H.V.A.C. UNIT SALL BE PROVIDED WITH STARTERS.
16) SOFTSERVE FREEZER; PROVIDE NEMA L15-30R RECEPTACLE, L15-30P PLUG AND APPROX. 6' CORD WITH SEALTITE COVER. 30 AMP BREAKER REQUIRED FOR EACH BARREL. RUN 3-#10 WIRES PLUS GROUND FROM POWER PANEL TO SOFTSERVE FREEZER RECEPTACLE. (PROVIDE SEALTITE CONNECTION AND SAFETY SWITCH IF REQUIRED BY CODE).
17) PROVIDE CORD AND PLUG FOR FOLLOWING EQUIPMENT:
   - (#1B) 2- DOOR CAKE DISPLAY FREEZER.
   - (#1C2) ICE MAKER.
   - (#2J) ICE MAKER.
   - (#3A & #3C) SOFTFREEZ (SEE NOTE 16)
18) NOT USED.
19) SURFACE MOUNT OUTLETS TO BACK SIDE OF COUNTER FRONT AFTER COUNTER INSTALLATION.
20) ELECTRICAL CONTRACTOR SHALL HAVE SHUNT TRIP BREAKERS INTERLOCKED W/FIRE EXTINGUSHLING SYSTEM.
21) PROVIDE WIRING FOR ALL INDOOR AND OUTDOOR SIGNAGE OF TENANT SPACE AND EQUIP OUTDOOR SIGN WITH PHOTOCELL OR TIMER - VERIFY WITH OWNER/TNANT.

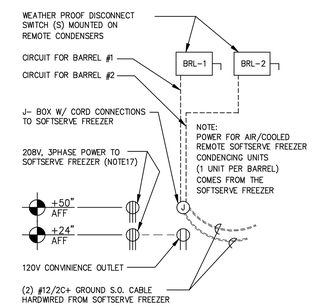

2 A2.4 S.S. FREEZER OUTLET ELEV.
NO SCALE

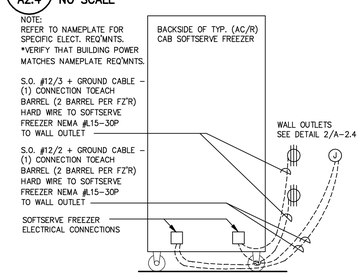

3 A2.4 S.S. FREEZER CONNECTION
NO SCALE

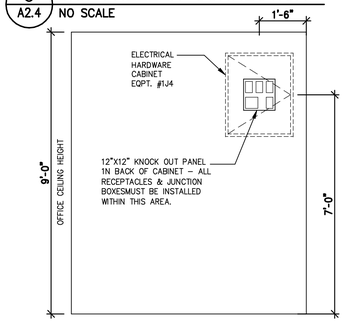

4 A2.4 ELECT. HARDWARE CAB. ELEV.
NO SCALE

TYPICAL ADA COMPLIED BATHROOM NOTES:

1. ADA BATHROOM SHALL COMPLY WITH ICC/ANSI A117.1-2018
2. PROVIDE BACKING AND SPPORT FOR GRAB BARS.
3. PROVIDE DUROCK OR GREEN BOARD ON ALL WET WALLS.
4. PROVIDE BACKING AND SPPORT FOR ALL PLUMBING FIXTURES
5. PROVIDE PAPER TOWEL DISPENCER PER ADA HEIGHTS.
6. PROVIDE SOAP DISPENCER PER ADA HEIGHTS.

1 ADA BATH DETAILS

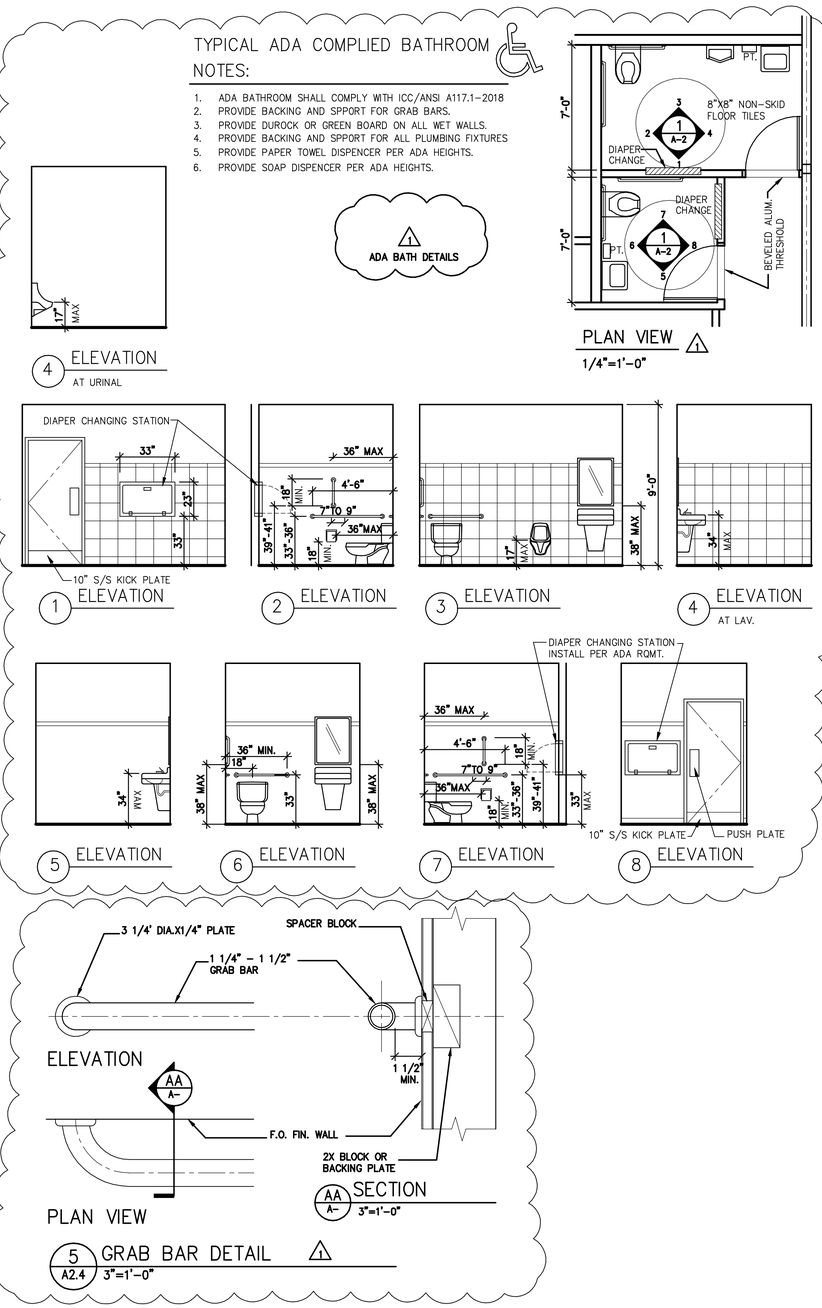

5 A2.4 GRAB BAR DETAIL 1
3"=1'-0"

#	DATE	DESCRIPTION
	10-24-20	ISSUED FOR PLANS CHECK
	12-15-20	REVISED ADDRESS & APN #
1	1-8-21	REVISED ADDRESS & APN #

REVISIONS

GENERAL CONTRACTOR:
RED MESA BUILDERS
NEVADA CONTRACTORS lic#81273
OFFICE: (702) 434-0046 FAX: (702) 434-0051
joe@redmesabuilders.com
4023 W. OQUENDO RD. STE B
LAS VEGAS NV 89118

PROJECT: T. I. FOR DAIRY QUEEN AT
8045 BLUE DIAMOND ROAD, LAS VEGAS, NEVADA
APN, 176-21-610-007

SHEET TITLE: EQUIPMENT ELECTRICAL POWER PLAN
DETAILS AND NOTES

DESIGN CORE
ARCHITECTURE · PLANNING · INTERIORS
JIM BERENDJI, ARCHITECT, A.I.A.
P. O. BOX 778425, HENDERSON, NV 89077
PHONE: (702) 731-0293 berendji@embarqmail.com

DATE: 10-2-20
SCALE: AS NOTED
JOB #: 201001

JIM BERENDJI REGISTERED No. 1943 1-8-21 ARCHITECT STATE OF NEVADA

A-2.4

FILE: C:\PROJECTS_JOE-RED-MESA\DAIRYQUEEN-BLUEDIAMONDNV\A-2.4.DWG DATE: 24 NOV 2020 TIME: 2:15 PM

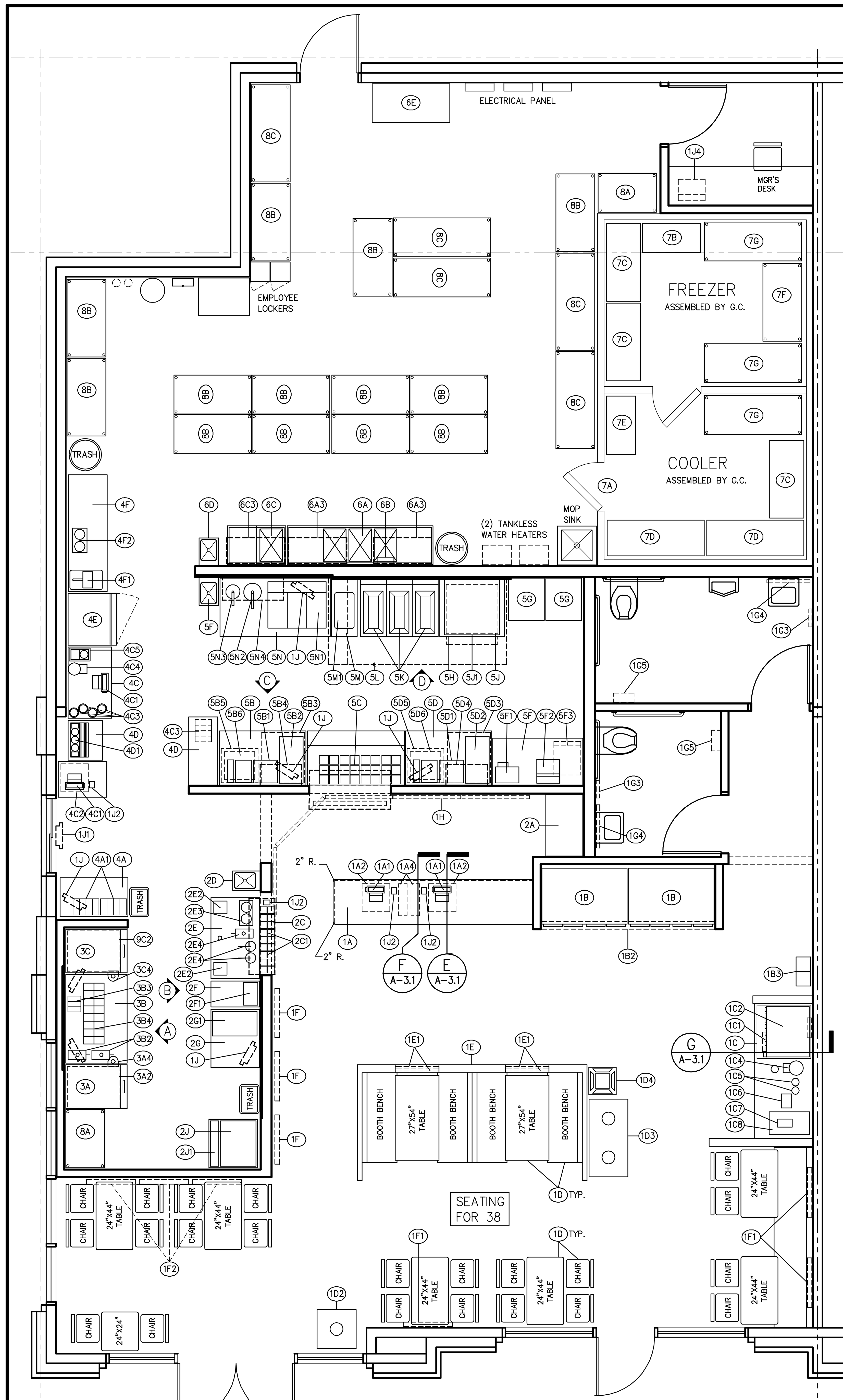

1 EQUIPMENT PLAN
A3.1
1/4"=1'-0"

EQUIPMENT SCHEDULE (PROVIDED BY DAIRY QUEEN)

NO.	QTY	ITEM	MANUFACTURER	MODEL NO.	VOLTAGE	PHASE	KW/HP	RECEPT	DIRECT	HOT	COLD	DRAIN	CONN.	BTUS	REMARKS
1A	1	SERVICE COUNTER	APPROVED VENDOR	QUOTE											SEE SHEET XX
1A1	2	CASH REGISTER	IBM-POS	4840-544	120	1	20KW	Y							NOTE 1
1A2	2	CASH DRAWER	IBM-POS	20P0270											
1A3	2	*ALLERGENS REGISTER SIGN	JOLIET PATTERN	995RD-15											
1A4	4	CUP DISPENSER (8OZ-44OZ)	DISPENSER-RITE	SLR-2											
1A5	4	*CUP DISPENSER BRACKET	DISPENSER-RITE	SLT-2-SMB											
1B	2	2 DOOR DISPLAY (A/C-R)	MASTERBILT	DQCD-48-R	120	1	1.32KW	Y							NOTE 13
1B1	2	*REMOTE COMPRESSOR	MASTERBILT	MHLZ0071BQ	208	1	1.5 HP	Y							VERIFY ALL REQUIREMENTS
1B2	1	"CAKE & TREATS" SIGN	SIGN SOURCE	ST4-F	120	1	.25 KW	Y							NOTE 14
1B3	1	WALL MOUNTED CAKE DISPLAY	JOLIET PATTERN	DQWALLCD											W/ CAKE BOOK HOLDER
1C	1	BEVERAGE COUNTER	APPROVED VENDOR	QUOTE											SEE SHEET XX
1C1	1	DRINK HEAD / ICE DISPENSER	LANCER	ACIB SENSATION	120	1	3.5 AMP	Y			3/8"	1"			NOTE 5
1C2	1	ICE MAKER (W/VARI SMART- KVS	SCOTSMAN	C1030SW-32	208	1	11.0AMPS	Y			3/8"	1/2"			MAX. 15 AMP BREAKER
1C3	1	*TURBO CARBONATOR	LANCER	QUOTE	120	1	VERIFY	Y			1/2 '				
1C4	1	ICED TEA DISPENCER	GOLD PEAK	BY OWNER/LOCALY	120	1	VERIFY	Y			3/8"				VERIFY ALL REQUIREMENTS
1C5	2	COFFEE AIR PUMP	BUNN	2.5 LITRE											
1C6	1	STRAW DISPENCER	VOLLRATH	3810-28											
1C7	1	NAPKIN DISPENCER	SCA TISSUE	6332000											
1C8	1	LID DISPENCER	VOLLRATH	2GH-LL-TW-AT											
1C9	1	*U.C. TRASH LINER	RUBBERMAID	2957 GRAY											
1D	1	SEATING /CHAIR PACKAGE	PLYMOLD	QUOTE											SEE FURNITURE SCHEDULE
1D1	1	*TABLE TOP CONDIMENT BASKET	CAL-MIL	WA141											VERIFY QUANTITY
1D2	1	SINGLE TRASH RECEPTACLE	PLYMOLD	80131											
1D3	1	DOUBLE TRASH RECEPTACLE	PLYMOLD	80132											
1D4	2	HIGH CHAIR	GAYCHROME	800LT											
1E	1	QUEUE LINE COLONNADE SEATING DIVIDER	PLYMOLD	DQQCW23											SEE SHEET A-XX
1E1	4	INDOOR POSTER FRAME (MAPLE)	JOLIET PATTERN	PFWOOD-08											SEE SHEET A-XX
1F	3	P.O.S. POSTER (BLACK FRAME)	APPROVED VENDOR	QUOTE											SEE SHEET A-XX
1F1	3	DQ HERITAGE CANVAS PRINTS (26"X70")	JOLIET PATTERN	QUOTE											SEE SHEET A-XX
1F2	1	3-DQ HERITAGE CANVAS PRINTS (21"X28")	JOLIET PATTERN	467-12 (J)											SEE SHEET A-XX
1G	2	HOURS SIGN (SINGLE)	JOLIET PATTERN	HOURSSIGN-1											
1G1	1	SIGN "WOMENS RESTROOM"	JOLIET PATTERN	FSRW-1											
1G2	1	SIGN "MENS RESTROOM"	JOLIET PATTERN	FSRM-1											
1G3	2	SIGN "HAND WASHING"	JOLIET PATTERN	FSRM-1											
1G4	2	WALL MIRROR	BOBRICK	B-165-2436											VERIFY MOUNT'G REQ'MNTS
1G5	2	BABY CHANGE STATION	KOALA BEAR KARE	KB101-00											WALL MOUNT
1H	1	5-PANEL DIGITAL MENU SYSTEM	CINEPLEX	QUOTE	120	1	2.0 KW	Y							NOTE 15, SEE SHT. XX
1J	7	VIDEO MONITOR	SRWI5US	19 ' FLAT	120	1	0.1 KW	Y							NOTE 2
1J1	1	DRIVE-THRU TIMER MONITOR	HYPERACTIVE	O-TIMER	120	1	0.1 KW	Y							W/MOUNTING BRACKET
1J2	5	PRINTER	EPSON	TM-88	120	1	0.1 KW	Y							
1J3	1	*D. T. HED SETD BASE STATION	HME	ION-IQ	120	1	0.2 KW	Y							
1J4	1	ELECTRONIC HARDWARE CABINETW/SHELVES	TRIPP LITE	SRWI5US-W/5 SHELVESIUIO											W/ 3 CABINET SHELVES
1K	1	* 3-SHELF CUP/TREAT DISPLAY	JOLIET PATTERN	1184WBK-16											NOTE 9
2A	1	24"dX36"w S.S. TABLE	WASSERSTROM	QUOTE											W/CASTERS & SHELF BELOW
2B	1	S.S. HOT KITCHEN SHELF (24"X51")	WASSERSTROM	F-46106											SEE SHT. XXX
2B1	1	S.S. CONDIMENT & TRAY SHELF	WASSERSTROM	D41262											WALL MOUNT
2C	1	51" COLD KITCHEN EXPEDITER & COND. SHELF	WASSERSTROM	F35497											SEE SHT. XXX
2C1	1	CONDIMENT & LID HOLDER	VOLLRATH	52653											BLACK CUTLERY BOX
2D	1	12"X18" HAND SINK	EAGLE	HSAN-10-F						1/2"	1/2"	1 1/2"			NOTE 8
2E	1	28"X50" S.S. BLIZZARD PREP TABLE	WASSERSTROM	F35498											W/ TRASH HOLE
2E1	1	*TRASH RECEPTACLE - 55 GAL.	RUBBERMAID	3958 BEIGE											
2E2	2	BLIZZARD MACHINE	HC DUKE	BM3	120	1	01.7 KW	Y							W/ FOOT PEDAL
2E3	1	DOUBLE CONE DIP	SERVER PRODUCTS	D-2 92020	120	1	0.1 KW	Y							
2E4	1	FUDGE PUMP	SERVER PRODUCTS	EZT-S-85790	120	1	0.5 KW	Y							
2E5	2	COLD FUDGE PUMP	SERVER PRODUCTS	83015/CP10											
2F	1	ARCTIC RUSH FR'ZR.	HC DUKE	145	120	1	NOTE 10	Y							VERIFY REQ'MNTS.
2F1	1	AUTO FILL UNIT (FOR HC DUKE)	LANCER	85-0084-01	120	1	0.5 KW	Y		3/8"					
2G	1	36" WORK TOP FREEZER	BEVERAGE-AIR	WTF-36A	120	1	1/3 HP	Y							W/CASTERS
2G1	1	TABLETOP VENTLESS OVEN	MERRYCHEF	EIKON-E2s	208	1	4.5 KW	Y							20 AMP CIRCUIT REQ'D.
2J	1	ICE MAKER	SCOTSMAN	CO830SW-32						3/8"		3/4"			MAX. 15AMP BREAKER
2J1	1	ICE BIN	SCOTSMAN	B530-S								3/4"			W/BIN ADAPTOR IF REQ'D.
3A	1	CAB SOFTSERVE FREEZER (AC/R)	HC-DUKE	GES-103	208	3	NOTE 6	Y							SEE NOTE 16 ON SHT. XX
3A1	2	* REFIGERATION LINE KIT	HC-DUKE	119125											
3A2	1	CONE/CUP DISPENSER	STEEKYE CRAFTSMAN	QUOTE											
EA3	1	* 26" MOUNT BRACKETS	STEEKYE CRAFTSMAN	MMB26-001											
3A4	1	PAPER COLLAR HOLDER	STEEKYE CRAFTSMAN	132017											
3A5	1	* ST. STEEL REFRIG. LINE CHASE	APPROVED VENDOR	QUOTE											
3B	1	TOPPING CABINET - COOLER BASE	NORLALKE	ZR152-SMSO-21DQ	120	1	1/4 HP	Y							
3B1	1	* 6" TOPPING CABINET BACKSHEF	NORLALKE	152581											
3B2	2	FUDGE PUMP	SERVER PRODUCTS	EZT-S-85790	120	1	0.5 KW	Y							
EB3	1	ACRYLIC NUT DISPENSER	CAL-MIL	393											
3B4	1	PORTION PLUS TOPPING DISPENSER	AUTOMATED EQUIPMENT	290799											
3B5	1	* 9"STAND-OFF BRACE (4 BANK)	STEELYE	290799											
3B6	1	* PUMP RISER	NORLAKE	152582											
3C	1	CAB SOFTSERVE FREEZER (AC/R)	HC-DUKE	GES-103	208	3	NOTE 6	Y							
3C1	1	* REFIGERATION LINE KIT	HC-DUKE	119125											
3C2	2	CONE/CUP DISPENSER	STEEKYE CRAFTSMAN	QUOTE											
EC3	1	* 26" MOUNT BRACKETS	STEEKYE CRAFTSMAN	MMB26-001											
3C4	1	PAPER COLLAR HOLDER	STEEKYE CRAFTSMAN	132017											
3C5	1	* ST. STEEL REFRIG. LINE CHASE	APPROVED VENDOR	QUOTE											
4A	1	24"X42" DRIVE-THRU ORGANIZER	METRO	DQ2442DRVST-2											
4A1	2	CONDIMENT TRAY	VOLLRATH	1375-31											
4B	1	HOUR SIGN - (DRIVE-THRU)	JOLIET PATTERN	HRS-DT-1											
4C	1	DRIVE-THRU DRINK COUNTER	WASSERSTROM	F615-67											
4C1	2	CASH REGISTER	IBM-POS	4840-544	120	1	0.2 KW	Y							
4C2	1	CASH DRAWER	IBM-POS	20P0270											
4C3	4	DROP- IN CUP DISPENSER	DISPENSE-RITE	SLR-2											

* = DENOTES EQUIPMENT NOT SHOWN ON EQUIPMENT PLAN, BUT PART OF EQUIPMENT PACKAGE SUPPLIED BY OWNER / TNANT THRU APPROVED EQUIPMENT PROVIDER

EQUIPMEN SCHEDULE (PROVIDED BY DAIRY QUEEN)

NO.	QTY	ITEM	MANUFACTURER	MODEL NO.	VOLTAGE	PHASE	KW/HP	RECEPT	DIRECT	HOT	COLD	DRAIN	CONN.	BTUS	REMARKS
4C4	1	ICED TEA DISPENCER	GOLD PEAK	BY OOWNER/LOCALLY	120	1	VERIFY	Y			3/8"				VERIFYALL REQ'MNTS.
4C5	1	COFFEE MAKER	BUNN	CWTF 15-2	120	1	1.57 KW	Y			1/4"				
4D	1	DRINK HEAD/ ICE BIN (8 VALVE)	LANCER	ICD 2300	120	1	1.55 KW	Y			1/2"	1"			NTE 5, W/CONVERSION STAND
4D1	1	LID HOLDER	PRONTO	C859-1											
4E	1	SINGLE BLAST FREEZER	MASTERBILT	IHC-27	208	1	1 HP	Y							W/ CASTERS
4F	1	24"dX72"w S.S. CAKE PREP STATION	METRO	DQ247CPS											
4F1	1	COPY CAKE PROJECTOR	KOPYKAKE	K-1000	120	1	1.2 KW	Y							
4F2	1	DOUBLE CONE DIP	SERVER PRODUCTS	D1-2 92020	120	1	0.1 KW	Y							
4G	1	FIRE EXTINGUISHER (GENERAL)	APPROVED VENDOR	CLASS ABC											
4H	1	FIRE EXTINGUISHER (KITCHEN)	APPROVED VENDOR	CLASS K											
4J	1	WATER FILTER SYSTEM	SELECTCO	SMF IC620							3/4"				VERIFY REQ'MNTS.
4K	1	BAG-N-BOX SHELF	APPROVED VENDOR	LOCALLY											
5A	1	18"X42" EXPEDITER STANT	WASSERSTROM	D73112											W/CONDIMENT TRAYS
5A1	1	CONDIMENT TRAY	CAMBRO	8RS8110-BLK											
5B	1	34"X53" WORK TABLE W/BUN DRAWER	WASSERSTROM	F46108											
5B1	1	6-DRAWER HOLDING CABINET	DUKE	FWM3-23-120	120	1	0.2 KW	Y							
5B2	1	TABLE TOP VENTLESS OVEN	MERRYCHEF	EIKON-E2s	208	1	4.5 KW	Y							20 AMP CIRCUIT REQ'D.
5B3	1	27" UNDER COUNTER REFRIGERATOR	TRUE	TUC-27R-LP	120	1	1/6 HP	Y							
5B4	1	STAINLESS STEEL WRAP SHELF	WASSERSTROM	F32040											WALL MOUNT
5B5	1	STAINLESS STEEL OVEN SHELF (LARGE)	WASSERSTROM	D62390											NOTE 3, WALL MOUNT
5B6	1	COMMERCIAL MICROWAVE OVEN	AMANA	DQ22HSI	208	1	3.2 KW	Y							
5C	1	60" SANDWICH PREP TABLE	TRUE	TSSU-60-24M-B-ST											NOTE 17
5D	1	34"X53" WORK TABLE W/BUN DRAWER	WASSERSTROM	F46108											
5D1	1	6-DRAWER HOLDING CABINET	DUKE	FWM3-23-120	120	1	0.2 KW	Y							
5D2	1	TABLE TOP VENTLESS OVEN	MERRYCHEF	EIKON-E2s	208	1	4.5 KW	Y							20 AMP CIRCUIT REQ'D.
5D3	1	27" UNDER COUNTER REFRIGERATOR	TRUE	TUC-27R-LP	120	1	1/6 HP	Y							
5D4	1	STAINLESS STEEL WRAP SHELF	WASSERSTROM	F32040											WALL MOUNT
5D5	1	STAINLESS STEEL OVEN SHELF (LARGE)	WASSERSTROM	D62390											NOTE 3, WALL MOUNT
5D6	1	COMMERCIAL MICROWAVE OVEN	AMANA	DQ22HSI	208	1	3.2 KW	Y							
5F	1	30"dX60"w ST. STEEL TABLE	WASSERSTROM	QUOTE											W/CASTERS, SHELF BELOW
5F1	1	BUN TOASTER	ROUNDUP	VCT-1000	208	1	2.6 KW	Y							W BF-1 BUN FEEDER
5F2	1	SABER KING SLICER/DICER	PRINCE CASTLE	980-000-00											
5F3	1	COMMERCIAL MICROWAVE OVEN (LARGE)	AMANA	DQ22HSI	208	1	3.2 KW	Y							
5G	2	BREAD RACK	BY OWNER	LOCALLY											
5H	1	DEEP WELL FREEZER	SILVERKING	SKMF34/10	120	1	1/4 HP	Y							W/CASTERS
5J	1	CHAIN BROILER	NIECO	JF63	120	1	2 AMPS	Y							W/QUICK DISCONNECD & CATALYST
5J1	1	CHAIN BROILER STAND	NIECO	21179											
5K	1	BATTERY OF (3) FRYERS W/ FILTER	FRYMASTER	FPGL330CA-DQ	120	1	1.0 KW	Y							W/QUICK DISCONNECT
5L	1	EXHAUST SYSTEM	CAPTIVE-AIRE	QOUOTE											NOTE 16
5M	1	34"dX16"w ST. STEEL TABLE	WASSERSTROM	D73109											W/CASTERS & OPEN BASE
5M1	1	ST. STEEL HALF PAN W/ PIVOT	VOLLRATH	30022/20028											
5N	1	68" WORK TOP FREEZER	CONTINENTAL	CFA68-BS 4D	120	1	1/2 HP	Y							W/CASTERS
5N1	1	36" FRY DUMP	SYEELYE CRAFTSMAN	100-036	120	1	1.1 KW	Y							
5N2	1	HEATED GRAVY PUMP	SERVER	FS-11, CP-10 1/2	120	1	0.4 KW	Y							
5N3	1	HEATED GRAVY PUMP	SERVER	FS-11, CP-10 1/2	120	1	0.5 KW	Y							
5N4	1	14"X36" ST. STEEL SHELF	WASSERSTROM	QUOTE											WALL MOUNT
5P	1	HAND SINK	EAGLE	HSAN-10-F						1/2"	1/2"	1 1/2"			NOTE 8
6A	1	SCUB SINK	WASSERSTROM	D54285						1/2"	1/2"	1 1/2"			
6A1	1	PRE-RINSE FAUCET	T & S BRASS	MFY-8WLN-12-CRMODB-TEE-RGD											W/ BRACKETS
6A2	3	* DRAIN LEVER	T & S BRASS	B-3950											
6A3	2	18"X36" WALL SHELF	METRO	1836NK											@ 66" AFF
6A4	1	18" WALL MOUNT BRACKETS	METRO	IWD18C											
6B	1	CHEMICAL DISPENSING SYSTEM	APPROVED VENDOR	QUOTE											VERIFY LOCAL REQ'MNTS
6C	1	SINGLE BOWL SINK W/ DRAIN BOARD	WASSERSTROM	D54287						1/2"	1/2"	1 1/2"			
6C1	1	* FAUCET	T & S BRASS	B-0231-CR											
6C2	1	* DRAIN LEVERS	T & S BRASS	B-3950											
6C3	1	18"X36" WALL SHELF	METRO	1836NK											@ 66" AFF
6C4	2	18" WALL MOUNT BRACKETS	METRO	IWD18C											
6D	1	12"X18" HAND SINK	EAGLE	HSAN-10-F						1/2"	1/2"	1 1/2"			NOTE 8
6E	1	COOKING OIL RECYCLING SYSTEM	MAHONEY ENVIRONMENTAL	MST-12	120	1	20 AMPS	Y							NOTE 18
6E1	1	* COOKING OIL PORT (EXTERIOR)	MAHONEY ENVIRONMENTAL	QUOTE											NOTE 18
7A	1	11'-0"X18'-0" wALK-1N COOLER/FREEZER	KOLPAK	QUOTE											W/FLOOR & BUIL-IN RAMP
7A1	1	* REMOTE COMPRESSOR (COOLER)	KOLPAK	VERIFY	208	3	0.75 HP	Y							160 LBS.
7A2	1	*STANDARD UNIT COOLER	KOLPAK	VERIFY	120	1	1.6 AMPS	Y				1/2"			
7A3	1	* STANDARD UNIT COOLER	KOLPAK	VERIFY	120	1	1.0 KW	Y							
7A4	1	* DOOR / CONTROLS	KOLPAK	VERIFY	208	3	2.5 HP	Y							213 LBS.
7A5	1	* REMOTE COMPRESSOR 9FREEZER)	KOLPAK	VERIFY	208	1	9.8 AMPS	Y				1/2"			
7A6	1	* STANDARD UNIT COOLER	KOLPAK	VERIFY	120	1	1.0 KW	Y							
7B	1	20"X36" DUNNAGE RACK	NEW AGE	2017											
7C	3	20"X48" DUNNAGE RACK	NEW AGE	2018											
7D	2	20"X60" DUNNAGE RACK	NEW AGE	2019											
7E	1	18"X36" EPOXY COATED SHELVING ASSEMBLY	METRO	QUOTE											4 SHELVES & 4 74" POSTS
7F	1	24"X48" EPOXY COATED SHELVING ASSEMBLY	METRO	QUOTE											4 SHELVES & 4 74" POSTS
7G	3	24"X60" EPOXY COATED SHELVING ASSEMBLY	METRO	QUOTE											4 SHELVES & 4 74" POSTS
8A	2	24"X36" SHELVING ASSEMBLY	METRO	QUOTE											4 SHELVES & 4 74" POSTS
8B	13	24"X48" SHELVING ASSEMBLY	METRO	QUOTE											4 SHELVES & 4 74" POSTS
8C	5	24"X60" SHELVING ASSEMBLY	METRO	QUOTE											4 SHELVES & 4 74" POSTS
9A	2	* SINGLE FACE DQ LOGO (4'-3"X6'-6")	ALLEN INDUSTRIES	QUOTE	120	1	0.6 KW	Y							NOTE 4 SEE SHEET XX
9B	2	* S.F. GRILL & CHILL (2'-1"X8'-5")	ALLEN INDUSTRIES	QUOTE	120	1	0.5 KW	Y							NOTE 4 SEE SHEET XX
9C	2	* DRIVE-THRU LOOP DETECTION	HME	WIRELESS-1Q											SEE SHEET XX
9D	1	* DQ "GRILL & CHILL" D.T. MENU BOARD	LSI	D10420SSLDN	120	1	0.4 KW	Y							NOTES 11 & 12
9D1	1	* DRIVE-THRU MENU BD. ADD-ON PANEL	LSI	D10384P											
9E	3	* SITE DIRECTIONAL SIGNAL	ALLEN INDUSTRIES	QUOTE	120	1	0.12 KW	Y							NOTE 12 SEE SHEET XX
9F	1	* OUTDOOR PATIO SEATING PACKAGE (OPTIONAL)	ALLEN INDUSTRIES	QUOTE											SEE OUTDOOR FURN. SCHED.
9G	1	* DRIVE-THRU PREVIEW BOARD (OPTIONAL)	LSI	10399-PC											NOTE 12
9H	1	* D.T. VEHICLE CLEARANCE BAR (OPTIONAL)	HOWARD	9DQ-0328											NOTE 12
9J	1	* DRIVE-THRU ORDER CANOPY (OPTIONAL)	HOWARD	9DQ-0329											NOTE 12

COUNTERNOTES:

1. 3/4" MDF PLYWOOD TYPICAL CONSTRUCTION AT BASE CABINETS
2. ALL COUNTER TOPS TO BE SCRIBE CUT BY G.C. IN THE FIELD (IF REQUIRED).
3. ALL COUNTERS TO BE SCRIBE CUT BY G.C. IN THE FIELD (IF REQUIRED).
4. PROVIDE SPLINE JOINTS W/DRAW-TIGHT HARDWARE AT COUNTRFRONT JOINTS.
5. REFER TO ROOM FINISH SCHEDULE FOR FINISH SPECIFICATIONS.
6. ALL MATERIALS ON COUNTER PLAN AND COUNTER DETAILS ARE SUPPLIED BY COUNTER MANUFACTURER AND INSTALLED BY GENERAL CONTRACTOR UNLESS OTHERWISE NOTED ON PLAN.
7. GENERAL CONTRACTOR TO VERIFY SIZE OF COUNTER DROP-INS OR CUT-IN EQUIPMENT (IF APPLICABLE). G.C. IS RESPONSIBLE FOR ALL FIELD CUTTING, INSTALLATION & SEALING, ETC. PER MANUFACTURERS RECOMMENDATIONS AND LOCAL CODE REQUIREMENTS.
8. FABRICATE & INSTALL SOLID SURFACE MATERIALS ACCORDING TO MF'RS. INSTRUCTIONS & GUIDLINES, MANUFACTURER / DITRIBUTOR OF MATERIALS MAY REQUIRE THAT FABRICATOR BE CERTIFIED FOR JOB.

JIM BERENDJI REGISTERED ARCHITECT No. 1943 11-24-20 STATE OF NEVADA

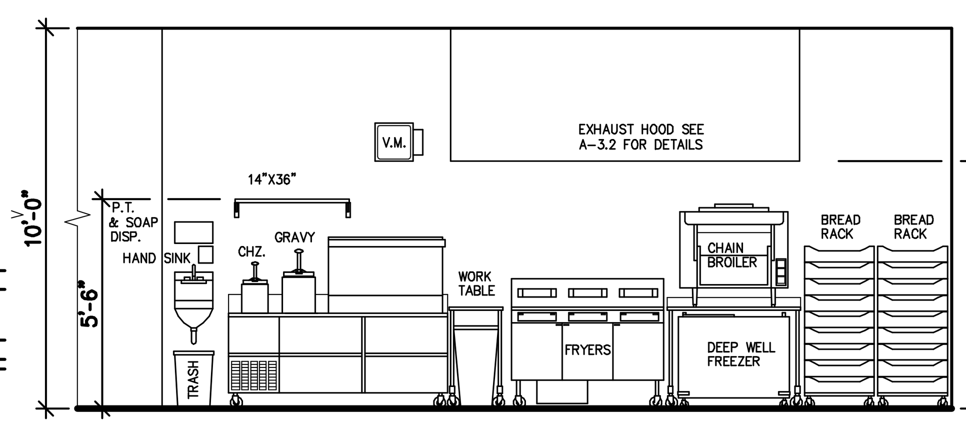

D EQUIPMENT ELEVATION
A3.1
1/4"=1'-0"

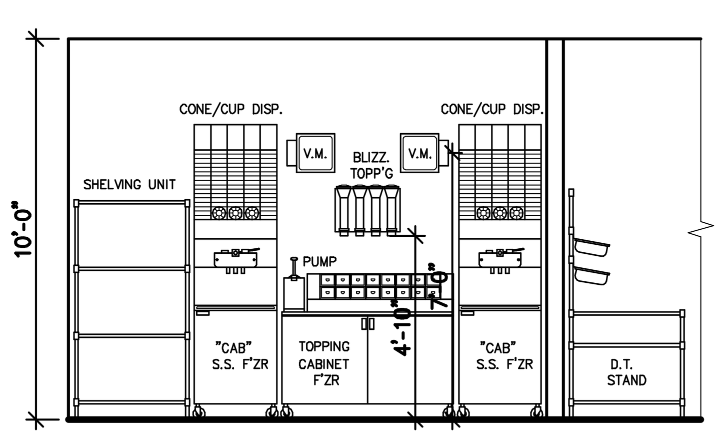

A EQUIPMENT ELEVATION
A3.1
1/4"=1'-0"

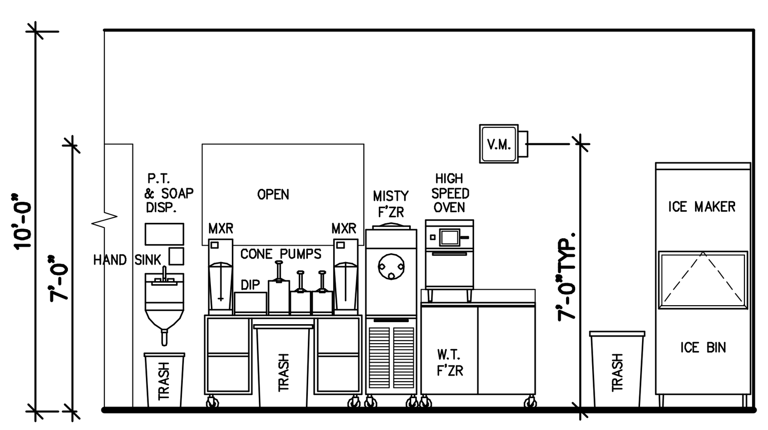

B EQUIPMENT ELEVATION
A3.1
1/4"=1'-0"

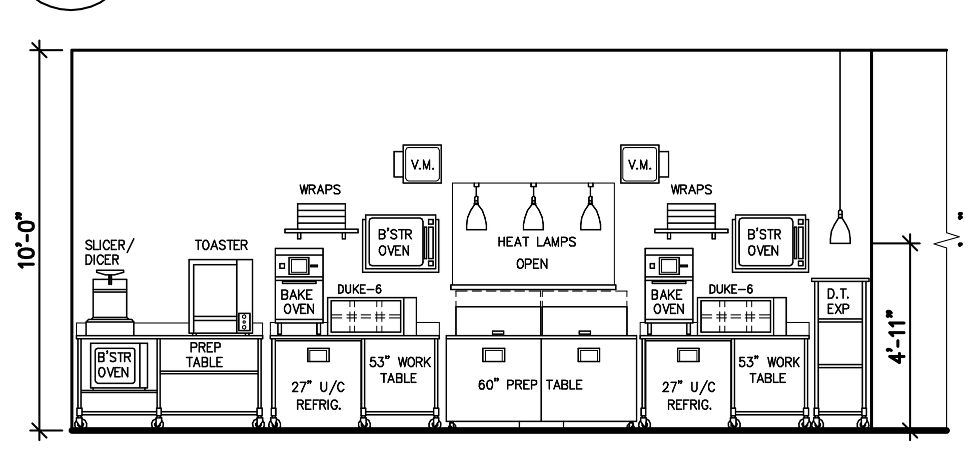

C EQUIPMENT ELEVATION
A3.1
1/4"=1'-0"

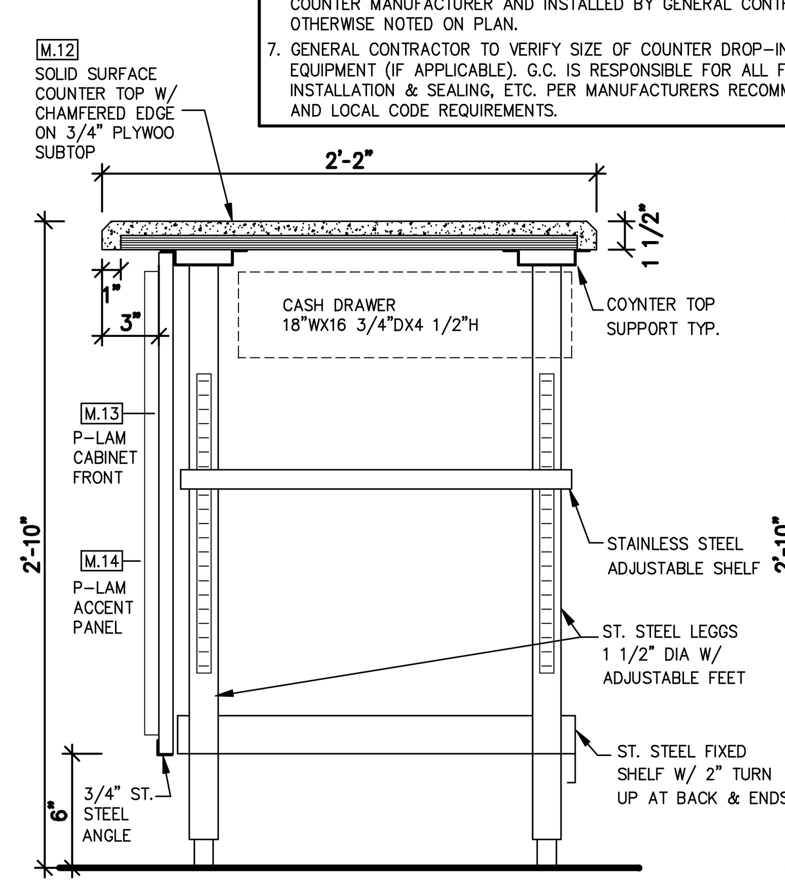

E COUNTER DETAIL
A3.1
1/4"=1'-0"

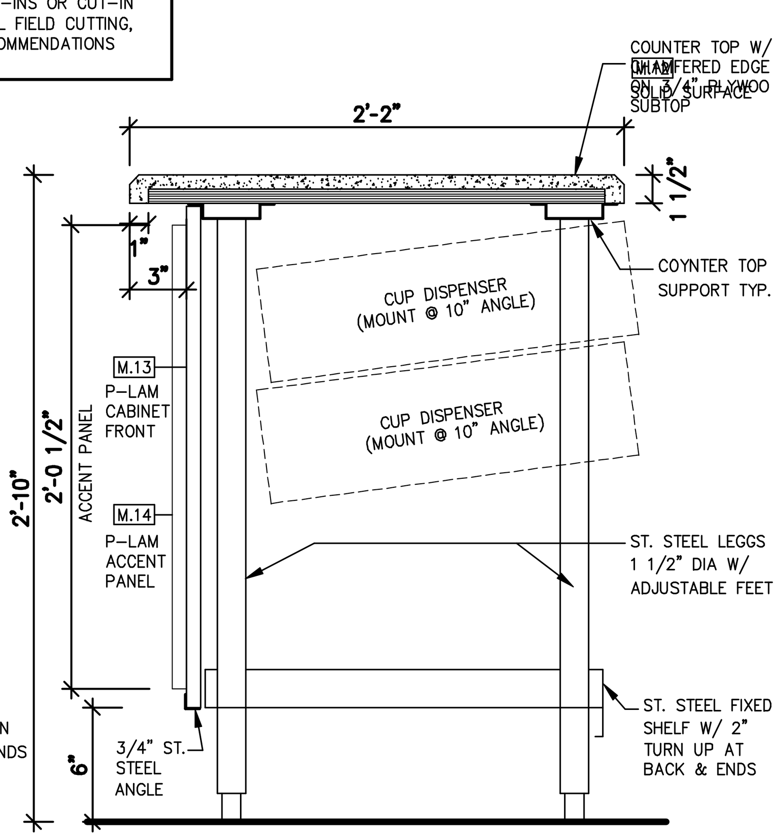

F COUNTER DETAIL
A3.1
1/4"=1'-0"

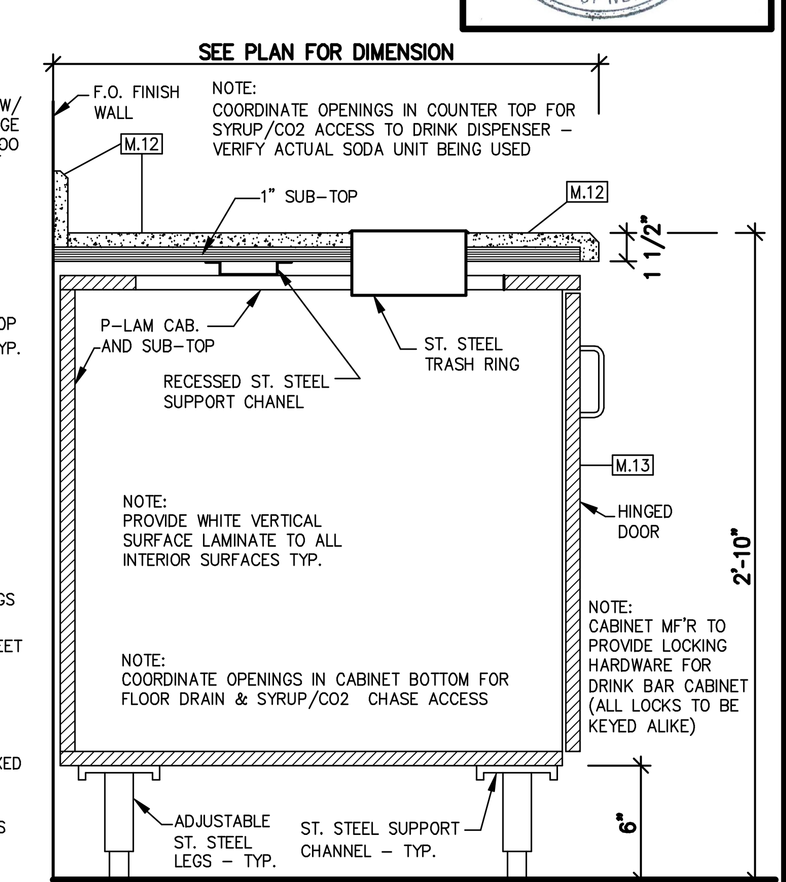

G COUNTER DETAIL
A3.1
1/4"=1'-0"

REVISIONS

#	DATE	DESCRIPTION
	10-24-20	ISSUED FOR PLANS CHECK
	12-15-20	RENISED ADDRESS & APN #

GENERAL CONTRACTOR:
RED MESA BUILDERS
NEVADA CONTRACTORS B#81273
OFFICE: (702) 434-0046 FAX: (702) 434-0051
joe@redmesabuilders.com
4023 W. OQUENDO RD. STE B
LAS VEGAS NV 89118

PROJECT: T. I. FOR DAIRY QUEEN AT
8045 BLUE DIAMOND ROAD, LAS VEGAS, NEVADA
APN, 176-21-610-007

SHEET TITLE: EQUIPMENT PLAN AND LIST OF EQUIPMENT

DESIGN CORE
ARCHITECTURE · PLANNING · INTERIORS
JIM BERENDJI, ARCHITECT, A.I.A.
P. O. BOX 778425, HENDERSON, NV 89077
PHONE: (702) 731-0293 berendji@embarqmail.com

DATE: 10-2-20
SCALE: AS NOTED
JOB #: 201001

A-3.1

FILE: C:\PROJECTS\JOE-RED-MESA\DAIRYQEEN-BLUDIAMOND\A-3.1.DWG DATE: 24 NOV 2020 TIME: 2:10 PM

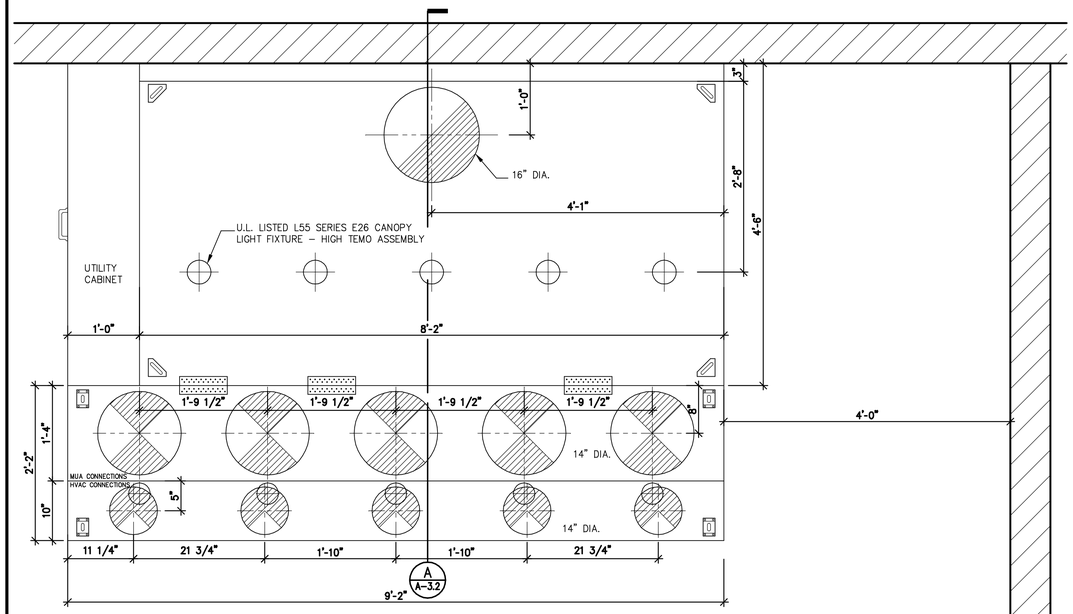

1 A3.2 PLAN VIEW, HOOD #1
1"=1'-0"

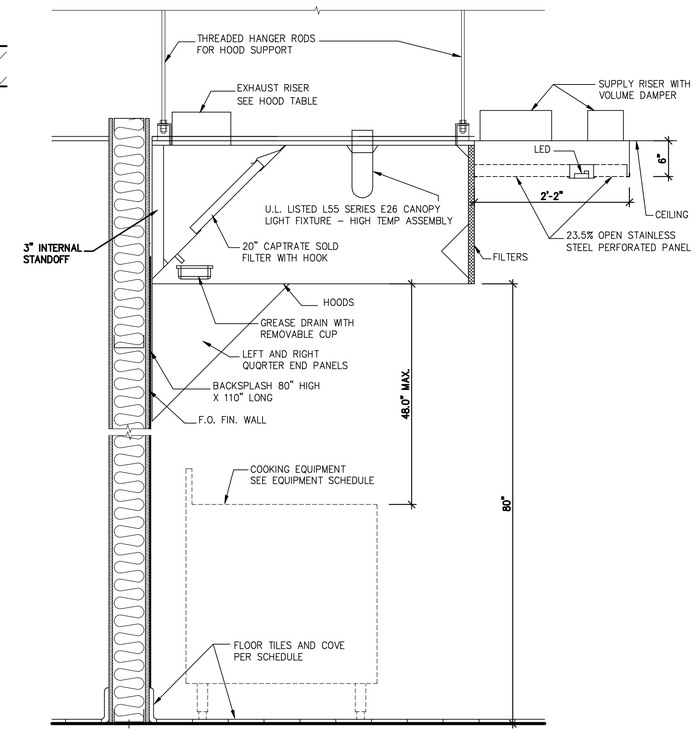

A A3.2 HOOD #1 DETAIL
1"=1'-0"

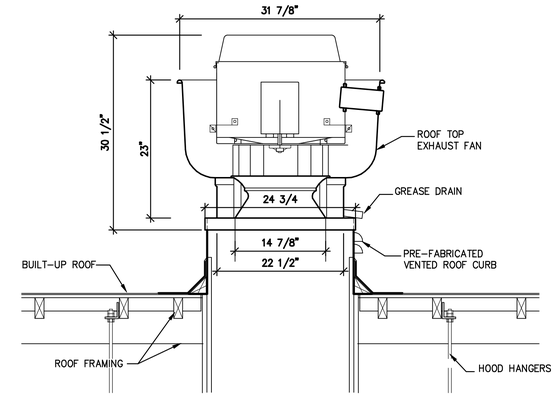

B A3.2 ROOF TOP EXHAUST DETAIL
1"=1'-0"
FAN #1 DU85HFA – EXHAUST FAN

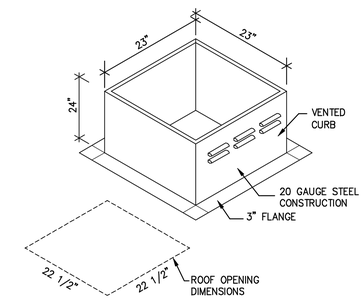

C A3.2 ROOF CURB DETAIL
1"=1'-0"

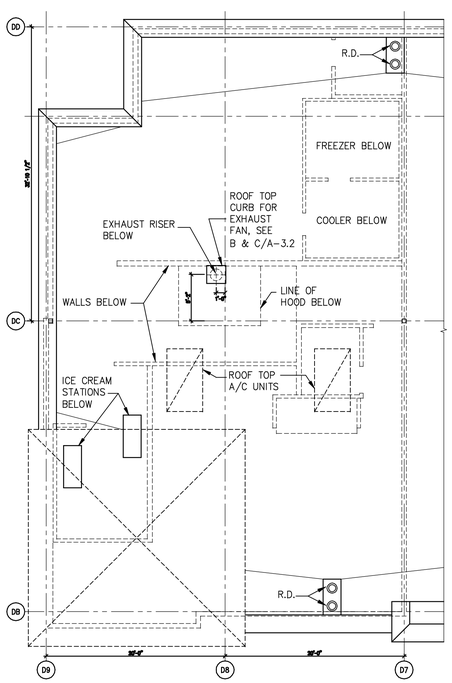

2 A3.2 PARTIAL ROOF PLAN
1/8"=1'-0"

JIM BERENDJI
REGISTERED
No. 1943
11-4-20
ARCHITECT
STATE OF NEVADA

REVISIONS

#	DATE	DESCRIPTION
	10-24-20	ISSUED FOR PLANS CHECK
	12-15-20	REVISED ADDRESS & APN #

GENERAL CONTRACTOR:
RED MESA BUILDERS
NEVADA CONTRACTORS lic#81273
OFFICE: (702) 434-0046 FAX: (702) 434-0051
joe@redmesabuilders.com
4023 W. OQUENDO RD. STE B
LAS VEGAS NV 89118

PROJECT:
T. I. FOR DAIRY QUEEN AT
8045 BLUE DIAMOND ROAD, LAS VEGAS, NEVADA
APN, 176-21-610-007

SHEET TITLE:
ROOF LAYOT, HOOD PLAN AND DETAILS

DESIGN CORE
ARCHITECTURE · PLANNING · INTERIORS
JIM BERENDJI, ARCHITECT, A.I.A.
P. O. BOX 778425, HENDERSON, NV 89077
PHONE: (702) 731-0293 berendji@embarqmail.com

DATE: 10-2-20
SCALE: AS NOTED
JOB #: 201001

A-3.2

FILE: C:\PROJECTS\JDE-RED-MESA\DAIRYQEEN-BLUDIAMONDVA-3.2.DWG DATE: 24 NOV 2020 TIME: 2:09 PM

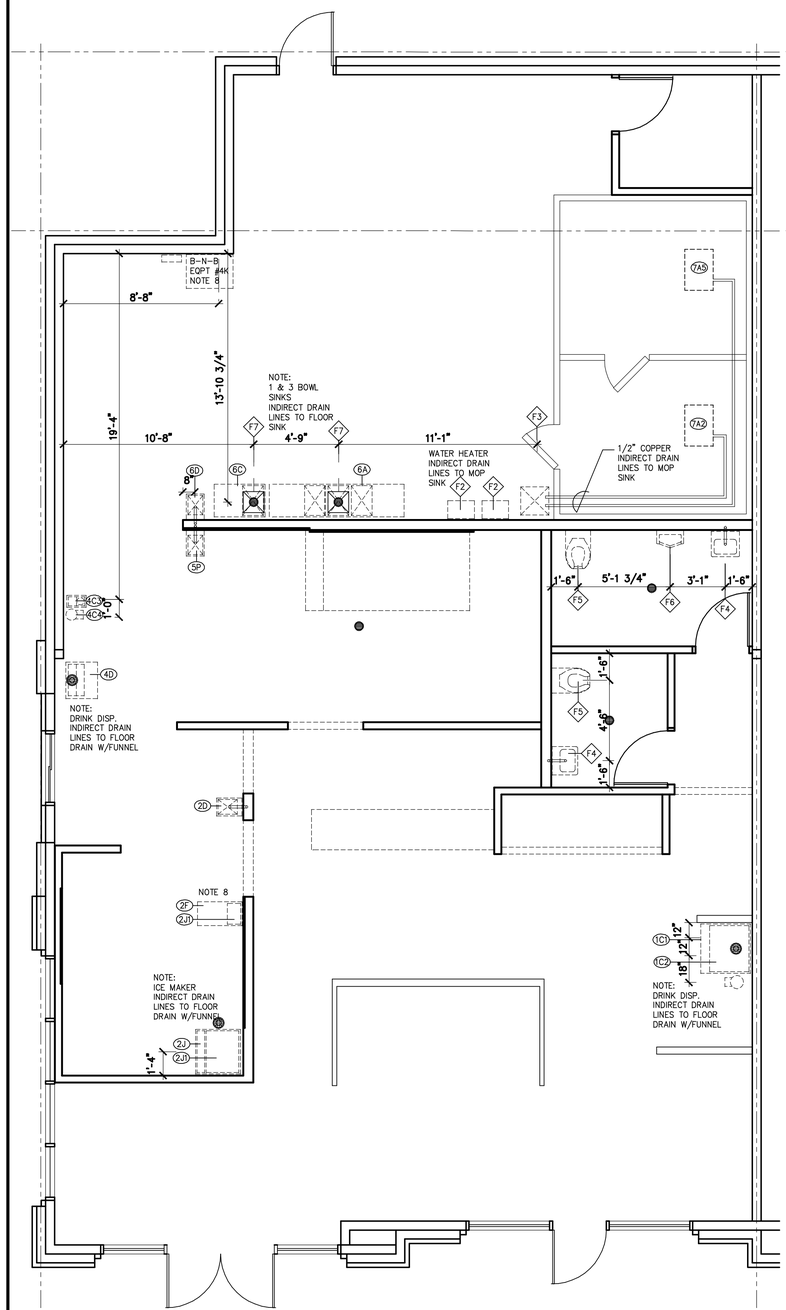

1 A-4.1 PLUMBING WASTE PLAN
1/4"=1'-0"

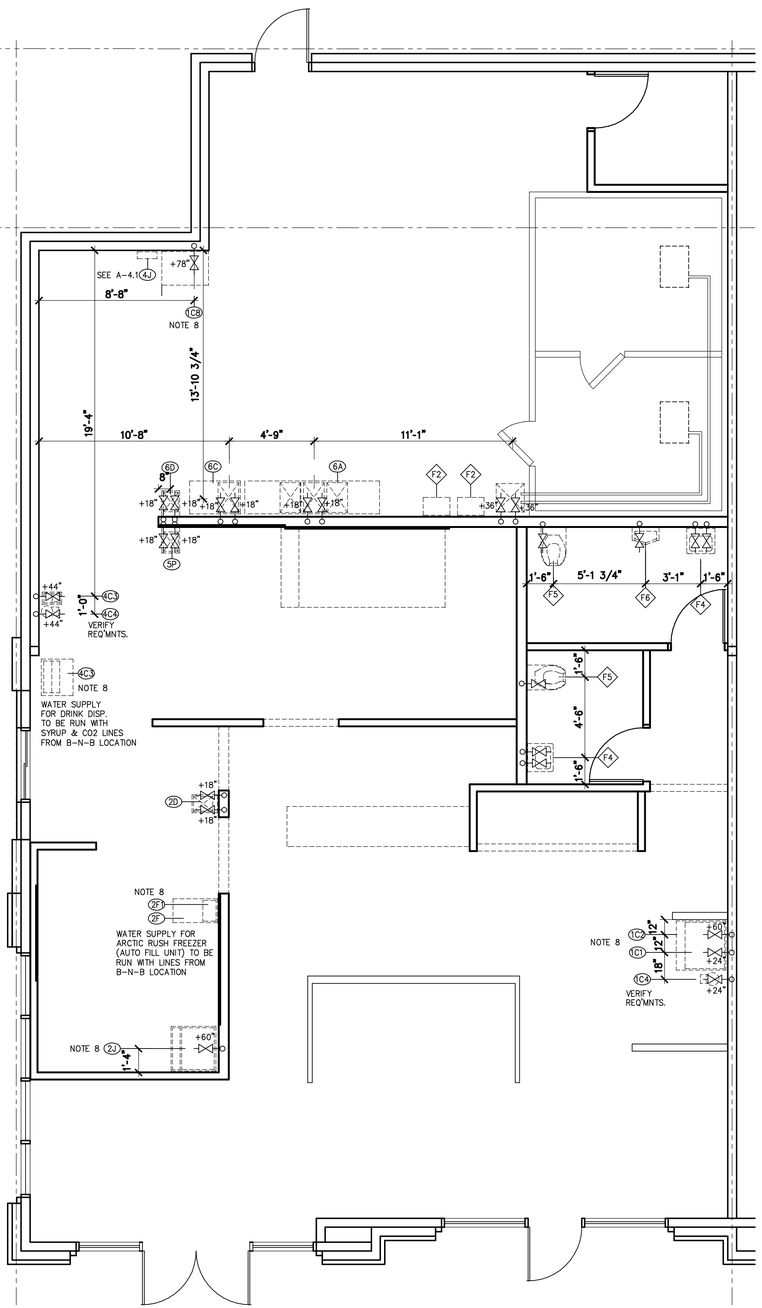

2 A-4.1 PLUMBING SUPPLY PLAN
1/4"=1'-0"

FIXTURE DRAIN & CONNECTION SCHEDULE							
	NO.	DESCRIPTION	WASTE	VENT	WATER COLD	WATER 120°	GAS	REMARKS
	F1	WATER METER						
	F2	TANKLESS WTR HTR	3/4" PRV		1"	1"	3/4"	VRIFY SIZE/LOCATION
	F3	MOP SINK	3"	2"		3/4"		
	F4	HAND SINK	1 1/2"	1 1/2"	1/2"	1/2"		
	F5	WATER CLOSET	3"	2"	1/2"			
	F6	URINAL	2"	1 1/2"	1/2"			
	F7	FLOOR SINK	3"	2"				
	F8	FLOOR DRAIN	3"	2"				W/ FUNNEL
	F9	FLOOR DRAIN	3"	2"				GENERAL PURPOSE
*	1B	CAKE DISPLAT FRZR						REFER TO SHT. XXX
*	1B1	REMOTE COMPRESSOR						REFER TO SHT. XXX
*	1C1	DRINK SYSTEM	F8		1/2"			INDIRCT DRAIN LINE TO FLOOR DRAIN
*	1C2	ICE MAKER	F8		3/8"			INDIRCT DRAIN LINE TO FLOOR DRAIN
*	1C3	CABONATOR			1/2"			
*	1C4	TEA DISPENSER			3/8"			VRIFY ALL REQUIREMENTS
*	2D	HAND SINK	1 1/2"	1 1/2"	1/2"	1/2"		
*	2F	MISTY FREEZER						VRIFY IF USING AUTO FILL SYST.
*	2F1	AUTO FILL SYSTEM			3/8"			VRIFY ALL REQUIREMENTS
*	2J/2J1	ICE MAKER	F7		3/8"			INDIRCT DRAIN LINES FROM ICE MAMER & ICE BIN TO FLOOR SINK
*	3A	S.S. FREEZER						REFER TO SHT. XXX
*	3C	S.S. FREEZER						REFER TO SHT. XXX
*	4C4	TEA DISPENSER			3/8"			VRIFY ALL REQUIREMENTS
*	4C5	COFFEE DISPENSER			1/2"			PROVIDE FLEX WATER LINE FROM S.O.V. TO HEATED UNIT CONNECTION
*	4D	DRINK SYSTEM	F8		1/2"			INDIRCT DRAIN LINE TO FLOOR DRAIN
*	4D	FILTER SYSTEM			3/4"			FILTERED WATER TO BE SUPPLIED TO EQUIP. #1C1, 1C2, 1C3, 2F1, 2J AND 4D
*	5H	CHAIN BROILER				3/4"		45,000 B.T.U.'S – SEE SHT. XX
*	5J	FRYERS (3)				1"		210,000 B.T.U.'S – SEE SHT. XX
*	5P	HAND SINK	1 1/2"	1 1/2"	1/2"	1/2"		
*	6A	3– BOWL SCRUB SINK	F7	1 1/2"	1/2"	1/2"		INDIRCT DRAIN LINE TO FLOOR SINK
*	6C	SINGLE BOWL SINK	F7	1 1/2"	1/2"	1/2"		PER ACTUAL UNIT PRCHASED
*	6D	HAND SINK	1 1/2"	1 1/2"	1/2"	1/2"		
*	4D	OIL RECYCLING SYSTEM						P.C. TO VERIFY ALL SYSTEM REQ'MTS. EQUIP. #1C1, 1C2, 1C3, 2F1, 2J AND 4D
*	7A2	COOLER EVAP. COIL.	F3					CONDENSATE LINE TO MOP SINK
*	7A5	FREEZER EVAP. COIL.	F3					CONDENSATE LINE TO MOP SINK

* REFERS TO EQUIPMENT PROVIDED BY OWNER AND ISTALLED BY PLUMBER

PLUMBING WASTE PLAN NOTES

1) REFER TO EQUIPMENT SCHEDULE FOR PLUMBING SPECIFICATIONS OF EQUIPMENT PROVIDED BY TENANT/OWNER.
2) FOLLWING FIXTURES OR (EQUAL) ARE PROVIDED AND INSTALLED BY PLUMBING CONTRACTOR.
   F1 – WATER METER, VERIFY LOCATION/SIZE
   F2 – WATER HEATER, RINNAI "TANKLESS" MTO-CT-TRW021, NATURAL GAS, 180,000 BTU/HR 4" INTAKE & 4" EHAUST, (75 GAL/MIN RECOVERY RATE AT 35 °RISE)
   F3 – MOP SINK, FIAT "MOLDED STONE" MSB 24"X24", 10" DEEP RECESSED W/WALL FLANGE FAUCET, FIAT SEVICE FAUCET # 830-AA
   F4 – HAND SINK,WALL MOUNTED WITH CARRIER, SLOAN SS-3003, WHITE 3 HOLE, CODE 3873003. FAUCET, ZURN # 27440-XL-FC SINGLE LEVER HANDLE (4" CENTER) W/METAL OPEN GRID STRAINER STOPS CHROME PLATED ANGLE STOPS. DRAIN CHROME PLATED 17 GAUGE METAL P-TRAP MAINTAIN 29" FROM FLOOR TO TOP OF LAV. PROVIDE ADA WRAP'S ON DRAIN AND WATER SUPPLY LINES.
   F5 – WATER CLOSET, TOTO CST744EB#01 (ADA CST744ELB#01) ECO DRAKE E-MAX 1.28 GPF 9WHITE0 WITH BOLT DOWN TANK LID. STOP, CHROME PLATED ANGLE STOP. SAET, SOLID PLASTIC ELONGATED OPEN FRONT W/CHECK HINGE (WHITE).
   F6 – URINAL, WALL MOUNTED, SLOAN SU-1009-A UNIVERSAL HIGH-EFFICIENCY FLUSHOMETER VALVE, TOTO TEUIUNIZ#CP 0.125 GPF ECOPOWER (HANDS FREE) INCLUDES 3/4" VACUUM BREAKER AND 3/4" ANGLE STOP SET.
   F7 – FLOOR SINK, ZURN #FD-2370-PV3 WITH 12" PVC TOP.
   F8 – FLOOR DRAIN W/FUNNEL, ZURN #ZN415-2NL-73 WITH ROUND FUNNEL.
   F9 – FLOOR DRAIN, ZURN #ZN415-2NH-5B.
3) REFER TO SHEET A-4.1 FOR ADDTIONAL PLUMBING NOTES ABD SPECIFICATIONS.
4) DO NOT SLOPE FLOOR AT FLOOR SINK OR FLOOR DRAINS.
5) REFRIGERATION SITE GLASS IS INCLUDED W/ALL REFRIGERATION EQIPMENT. FURNISHED BY TENANT/OWNER THROUGH IDQ.
6) DIMENSION GIVEN TO STUB-UPS ARE CRITICAL FOR EQUIPMENT PLACEMENT.
7) GENERAL CONTRACTOR TO TRENCH/CORE DRILL THE EXISTING CONCRETE SLAB FOR ANY APPLICABLE PLUMBING LINES.
8) SOFT DRINK SUPPLIER SHALL RUN DRINK LINES FROM BAG-N BOX TO DRINK DISPENSERS AND MISTY FREEZER AUTO-FILL UNIT – PROVIDE FINAL FILTERED WATER CONNECTIONS AS REQUIRED – (G.C. TO PROVIDE AN UNDERGROUND OR IN-WALL CHASE IF REQUIRED). FOR DRINK LINES BEING RUN DOWN FACE OF A WALL, CONTRACTOR TO COORDINATE A STAINLESS STEEL CHASEWAY/SHROUD – VERIFY ALL REQUIREMENTS.

PLUMBING WASTE PLAN NOTES

1) REFER TO EQUIPMENT SCHEDULE FOR PLUMBING SPECIFICATIONS OF EQUIPMENT PROVIDED BY TENANT/OWNER.
2) FOLLWING FIXTURES OR (EQUAL) ARE PROVIDED AND INSTALLED BY PLUMBING CONTRACTOR.
   F1 – WATER METER, VERIFY LOCATION/SIZE
   F2 – WATER HEATER, RINNAI "TANKLESS" MTO-CT-TRW021, NATURAL GAS, 180,000 BTU/HR 4" INTAKE & 4" EHAUST, (75 GAL/MIN RECOVERY RATE AT 35 °RISE)
   F3 – MOP SINK, FIAT "MOLDED STONE" MSB 24"X24", 10" DEEP RECESSED W/WALL FLANGE FAUCET, FIAT SEVICE FAUCET # 830-AA
   F4 – HAND SINK,WALL MOUNTED WITH CARRIER, SLOAN SS-3003, WHITE 3 HOLE, CODE 3873003. FAUCET, ZURN # 27440-XL-FC SINGLE LEVER HANDLE (4" CENTER) W/METAL OPEN GRID STRAINER STOPS CHROME PLATED ANGLE STOPS. DRAIN CHROME PLATED 17 GAUGE METAL P-TRAP MAINTAIN 29" FROM FLOOR TO TOP OF LAV. PROVIDE ADA WRAP'S ON DRAIN AND WATER SUPPLY LINES.
   F5 – WATER CLOSET, TOTO CST744EB#01 (ADA CST744ELB#01) ECO DRAKE E-MAX 1.28 GPF 9WHITE0 WITH BOLT DOWN TANK LID. STOP, CHROME PLATED ANGLE STOP. SAET, SOLID PLASTIC ELONGATED OPEN FRONT W/CHECK HINGE (WHITE).
   F6 – URINAL, WALL MOUNTED, SLOAN SU-1009-A UNIVERSAL HIGH-EFFICIENCY FLUSHOMETER VALVE, TOTO TEUIUNIZ#CP 0.125 GPF ECOPOWER (HANDS FREE) INCLUDES 3/4" VACUUM BREAKER AND 3/4" ANGLE STOP SET.
   F7 – FLOOR SINK, ZURN #FD-2370-PV3 WITH 12" PVC TOP.
   F8 – FLOOR DRAIN W/FUNNEL, ZURN #ZN415-2NL-73 WITH ROUND FUNNEL.
   F9 – FLOOR DRAIN, ZURN #ZN415-2NH-5B.
3) REFRIGERATION SITE GLASS IS INCLUDED W/ALL REFRIGERATION EQIPMENT. FURNISHED BY TENANT/OWNER THROUGH INTERNATIONAL DAIRY QUEEN.
4) PLUMBING CONTRACTOR TO VERIFY IN FIELD ALL EXISTING UTILITIES, DIMENSIONS AND CONDITIONS PRIOR TO BIDDING AND CONSTRUCTION
5) DIMENSION GIVEN TO STUB-UPS ARE CRITICAL FOR EQUIPMENT PLACEMENT.
6) DOMESTIC WATER PIPING INSULATED WITH 1/2" FIBER GLASS INSULATIONAND TO HAVE AN ALL SERVICE VAPOR BARRIER JACKET WITH SEALED JOINTS.
7) PROVIDE VALVED CONNECTION AT ALL FIXTURES.
8) FILTERED WATER TO BE PROVIDED TO THIS EQUIPMENT ITEM – VERIFY.

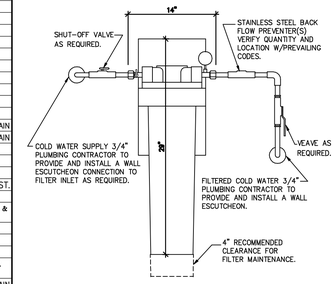

3 A-4.1 WATER FILTER DETAIL
NO SCALE

PLUMBING LEGEND	
	FLOOR SINK
	FLOOR DRAIN
	FLOOR DRAIN W/FUNNEL
	CONDENSATE DRAIN LINE
	SHUT-OFF VALVE (WATER)

NOTE:

REFER TO PLUMBING DRAWING FOR FULL PLAMBING LAYOUTS AND SCHEDULES.

JIM BERENDJI
REGISTERED
No. 1943
11-24-20
ARCHITECT
STATE OF NEVADA

REVISIONS

#	DATE	DESCRIPTION
	10-24-20	ISSUED FOR PLANS CHECK
	12-15-20	REVISED ADDRESS & APN #

GENERAL CONTRACTOR:
RED MESA BUILDERS
NEVADA CONTRACTORS #0081273
OFFICE: (702) 434-0046 FAX: (702) 434-0051
joe@redmesabuilders.com
4023 W. OQUENDO RD. STE B
LAS VEGAS NV 89118

PROJECT: T. I. FOR DAIRY QUEEN AT
8045 BLUE DIAMOND ROAD, LAS VEGAS, NEVADA
APN, 176-21-610-007

SHEET TITLE: PLUMBING LAYOURTS, DETAILS AND NOTES

DESIGN CORE
ARCHITECTURE - PLANNING - INTERIORS
JIM BERENDJI, ARCHITECT, A.I.A.
P. O. BOX 778425, HENDERSON, NV 89077
PHONE: (702) 731-0293
berendji@embarqmail.com

DATE: 10-2-20
SCALE: AS NOTED
JOB #: 201001

A-4.1

FILE: C:\PROJECTS\JOB-RED-MESA\DAIRYQEEN-BLUEDIAMOND\A-4.1.DWG DATE: 24 NOV 2020 TIME: 2:11 PM

ROUND DUCTWORK LEGEND

1. SINGLE-LINE ILLUSTRATIONS ARE SYMBOLS USED ON DRAWINGS.

TYPE	SINGLE-LINE	DOUBLE-LINE
90° TAKE-OFF		D, R=D
45° TAKE-OFF		R=D
45° TAKE-OFF		
45° TAKE-OFF		
90° @ LAST TAKE-OFF		OR, OR
90° @ LAST TAKE-OFF		OR, OR
90° CONICAL TAKE-OFF		
SIZE TRANSITION		15° MAX

RECTANGULAR DUCTWORK LEGEND

1. SINGLE-LINE ILLUSTRATIONS ARE SYMBOLS USED ON DRAWINGS.
2. SIZE A & B DIMENSIONS IN PROPORTION TO AIR QUANTITIES IN EACH LEGS OF SPLIT, UNLESS OTHERWISE NOTED.

TYPE	SINGLE-LINE	DOUBLE-LINE
90° MITER ELBOW	PROVIDE TURNING VANES ON ALL MITER ELBOWS	
TRANSITION		
RADIUS SPLITTER TAKE-OFF		A, B
90° RADIUS ELBOW (MIN. R/O = 1.0)		
CONICAL SPIN-IN TAKE-OFF		ø
ANGLE TAKE-OFF		
90° SPLITTER TAKE-OFF		A, B

ANCHORAGE AND BRACING NOTES

1. ALL EQUIPMENT, PIPING, AND DUCTWORK SHALL BE ANCHORED OR BRACED IN ACCORDANCE PER CODE. THE CONTRACTOR SHALL BE RESPONSIBLE FOR PROVIDING ANCHORAGE AND/OR BRACING FOR ALL EQUIPMENT REGARDLESS OF WHETHER DETAILED OR SHOWN ON PLANS.
2. ALL DUCTWORK AND PIPING SHALL BE SUPPORTED OR BRACED IN ACCORDANCE WITH THE SMACNA GUIDELINES FOR "SEISMIC RESTRAINTS OF MECHANICAL SYSTEMS AND PLUMBING PIPING SYSTEMS," SUPERSTRUT "SEISMIC RESTRAINT SYSTEM," UNISTRUT CORP. "SEISMIC BRACING FOR DUCTWORK, CONDUIT, AND CABLE TRAY SUPPORTS," OR B-LINE "SEISMIC RESTRAINTS." IF THE PIPE SIZE EXCEEDS THE SIZE INCLUDED IN THESE MANUALS, CUSTOM DESIGNED SUPPORTS ARE REQUIRED. ALL CUSTOM SUPPORTS REQUIRE THE APPROVAL OF A REGISTERED STRUCTURAL ENGINEER.
3. EQUIPMENT ANCHORAGE DETAILING & ENGINEERING CALCULATIONS, TO MEET SELECTED EQUIPMENT MANUFACTURER REQUIREMENTS, ARE TO BE INCLUDED AS PART OF EQUIPMENT SHOP DRAWINGS. CONTRACTOR SHALL FIELD VERIFY HOUSEKEEPING PADS DIMENSIONS BASED ON ANCHORAGE REQUIREMENTS. REFER TO STRUCTURAL DRAWINGS FOR CONCRETE HOUSEKEEPING PAD DESIGN.

MECHANICAL NOTES

1. ALL WORK SHALL CONFORM TO THE LATEST ADOPTED AND AMENDED THE CITY OF LAS VEGAS BUILDING CODES (2018 INTERNATIONAL BUILDING CODE, 2018 UNIFORM MECHANICAL CODE, 2018 UNIFORM PLUMBING CODE, 2017 NATIONAL ELECTRICAL CODE, 2018 INTERNATIONAL ENERGY CONSERVATION CODE) AND ALL FEDERAL, STATE AND LOCAL REGULATIONS.
2. SUBMISSION OF BID IN CONNECTION WITH THIS WORK SHALL IMPLY THAT THE BIDDER HAS EXAMINED THE JOB SITE UNDER WHICH THE CONTRACTOR WILL BE OBLIGATED TO OPERATE UNDER THIS CONTRACT. NO EXTRA CHARGE WILL BE ALLOWED FOR FAILURE OF ANY BIDDER TO EXAMINE THE SITE PRIOR TO BID.
3. WHERE USED, THE TERM "PROVIDE" SHALL MEAN "FURNISH AND INSTALL".
4. IN THE EVENT OF A CONFLICT OR INCONSISTENCY BETWEEN ITEMS INDICATED ON DESIGN PLANS/SPECIFICATIONS WITH CODE REQUIREMENTS, THE MORE STRINGENT STANDARD SHALL PREVAIL.
5. CONTRACTOR SHALL FURNISH LABOR, MATERIALS, EQUIPMENT, APPURTENANCES, AND TRANSPORTATION AS REQUIRED TO PROPERLY INSTALL ALL HVAC SYSTEMS OR RELATED COMPONENTS AS INDICATED ON PLANS AND SPECIFIED HEREIN.
6. ALL EQUIPMENT, MATERIAL AND APPURTENANCES TO BE INSTALLED AS PART OF THE PROJECT SHALL BEAR AN UNDERWRITERS LABORATORIES LABEL (UL), AND INSTALLED IN SUCH A MANNER FOR WHICH THEY ARE DESIGNED AND APPROVED.
7. CONTRACTOR SHALL DOCUMENT AND RELAY ANY MAJOR DEVIATIONS FROM THE DESIGN DOCUMENTS, AND ATTAIN APPROVAL FROM THE OWNER/DESIGN TEAM BEFORE PROCEEDING. CONTRACTOR SHALL PROVIDE AS-BUILT COPIES INDICATING ALL CHANGES/DEVIATIONS MADE DURING CONSTRUCTION. CONTRACTOR SHALL PROVIDE COMPLETED AS-BUILT DRAWINGS IN THE LATEST VERSION OF AUTOCAD.
8. ALL WORK SHALL BE PERFORMED IN A CLEAN AND WORKMANLIKE MANNER. CARE SHALL BE EXERCISED TO MINIMIZE ANY CONVENIENCE OR DISTURBANCE TO OTHER AREAS OF THE BUILDING WHICH ARE TO REMAIN IN OPERATION. ISOLATE WORK AREAS BY MEANS TO KEEP DUST AND DIRT WITHIN THE CONSTRUCTION AREA.
9. THE ARRANGEMENT OF EQUIPMENT AND PIPING SHOWN ON THE DRAWINGS IS BASED UPON INFORMATION AVAILABLE TO THE ENGINEER AT THE TIME OF DESIGN AND IS NOT INTENDED TO SHOW EXACT DIMENSIONS PARTICULAR TO A SPECIFIC MANUFACTURER. THE DRAWINGS ARE, IN PART, DIAGRAMMATIC AND SOME FEATURES OF THE ILLUSTRATED EQUIPMENT INSTALLATION MAY REQUIRE REVISION TO MEET ACTUAL EQUIPMENT INSTALLATION REQUIREMENTS. STRUCTURAL SUPPORTS, FOUNDATIONS, CONNECTED PIPING, VALVES, PIPE SUPPORTS AND ELECTRICAL CONDUIT SPECIFIED MAY HAVE TO BE ALTERED OR ADDITIONAL ITEMS REQUIRED TO ACCOMMODATE THE EQUIPMENT PROVIDED. NO ADDITIONAL PAYMENT WILL BE MADE FOR SUCH REVISIONS, ALTERATIONS, AND/OR ADDITIONS.
10. CONTRACTOR SHALL VERIFY ALL DIMENSIONS AT THE SITE MAKING FIELD MEASUREMENTS AND SHOP DRAWINGS NECESSARY FOR FABRICATION OR ERECTION OF HVAC AND PIPING SYSTEMS. MAKE ALLOWANCE FOR BEAMS, PIPES, AND OTHER OBSTRUCTIONS IN BUILDING CONSTRUCTION. CHECK DRAWINGS SHOWING WORK OF OTHER TRADES AND CONSULT WITH THE OWNER'S REPRESENTATIVE IN THE EVENT OF POTENTIAL INTERFERENCE. SHOP DRAWINGS SHALL BE MINIMUM 1/4"=1'-0" SCALE, INDICATING FITTINGS, SIZES, WELDS, AND CONFIGURATIONS AND SUBMITTED IN THE LATEST VERSION OF AUTOCAD TO THE ENGINEER FOR REVIEW.
11. CONTRACTOR SHALL COORDINATE HIS WORK WITH ALL OTHER TRADES PRIOR TO FABRICATION, PURCHASE, AND/OR INSTALLATION OF ALL WORK.
12. BEFORE COMMENCEMENT OF WORK, CONTRACTOR SHALL VERIFY THE EXACT LOCATIONS, ELEVATIONS, AND CHARACTERISTICS OF ALL UTILITIES.
13. CONTRACTOR SHALL SECURE AND PAY ALL FEES AND PERMITS PERTAINING TO THE CONTRACT.
14. EXISTING MATERIALS THAT ARE REMOVED SHALL NOT BE REUSED IN NEW SYSTEMS, EXCEPT WHERE INDICATED AS BEING RELOCATED.
15. ALL EQUIPMENT SHALL BE INSTALLED IN STRICT COMPLIANCE WITH THE MANUFACTURER'S WRITTEN INSTRUCTIONS.
16. GALVANIZED SHEET METAL SHALL BE PROVIDED FOR ALL HVAC DUCT SYSTEMS (EXCEPT WHERE ANOTHER MATERIAL IS INDICATED), AND SHALL BE CONSTRUCTED/SUPPORTED/INSTALLED IN ACCORDANCE WITH THE LATEST EDITION OF THE UNIFORM MECHANICAL CODE AND THE LATEST SMACNA STANDARDS.
17. ALL PIPING SHALL BE INSTALLED AS INDICATED ON THE DRAWINGS IN A CLEAN AND WORKMANLIKE MANNER AND BE SUPPORTED AS REQUIRED BY CODES. PIPING SHALL BE SET UP AND DOWN AND OFFSET AS REQUIRED TO SUIT FIELD CONDITIONS. DIELECTRIC COUPLINGS SHALL BE USED WHERE DISSIMILAR METALS ARE JOINED.
18. CONTRACTOR SHALL PROVIDE ALL NECESSARY SUPPORTS FOR FIXTURES, DUCTWORK, PIPING, AND MECHANICAL EQUIPMENT IN ORDER TO COMPLY WITH SEISMIC REQUIREMENTS AS OUTLINED BY THE LATEST EDITION(S) OF THE BUILDING CODE, SMACNA INSTALLATION STANDARDS, AND ALL RELATED LOCAL ORDINANCES.
19. PIPING AND DUCT SUPPORTS SHALL BE AS FOLLOWS: ALL BRACING OF DUCTS AND PIPING SHALL BE INSTALLED IN ACCORDANCE WITH SMACNA GUIDELINES WHERE BRACING DETAILS ARE NOT SHOWN ON THE DRAWINGS OR IN THE GUIDELINES, THE FIELD INSTALLATION SHALL BE SUBJECT TO THE APPROVAL OF THE MECHANICAL ENGINEER. A COPY OF THE GUIDELINES PUBLISHED BY SMACNA SHALL BE PROVIDED BY THE CONTRACTOR AND KEPT ON THE JOB AT ALL TIMES.
20. CONTRACTOR SHALL NOT BORE, NOTCH, CUT, OR PENETRATE INTO A STRUCTURAL MEMBER WITHOUT WRITTEN APPROVAL FROM THE OWNER'S REPRESENTATIVE OR STRUCTURAL ENGINEER OF RECORD.
21. PRIOR TO OCCUPANCY ALL HVAC SYSTEMS SHALL BE BALANCED IN ACCORDANCE WITH CONTRACT DOCUMENTS.
22. ALL FLEXIBLE DUCTWORK SHALL NOT EXCEED 7'-0" IN LENGTH TO RESPECTIVE AIR DEVICE, SHALL BE INSTALLED PER MANUFACTURER'S LISTING STRETCHED AS TIGHT AS POSSIBLE, AND SHALL MEET THE REQUIREMENTS OF NFPA SECTION 4.3.2 IN CONSTRUCTION AND INSTALLATION.
23. MANUAL VOLUME DAMPERS SHALL BE PROVIDED IN ALL DUCT BRANCHES TO INDIVIDUAL DIFFUSERS, GRILLES, AND REGISTERS.
24. AIR DISTRIBUTION SYSTEMS SHALL NOT BE OPERATED WITHOUT A FILTER IN PLACE. CONTRACTOR SHALL REPLACE ALL FILTERS WITH A COMPLETE AND NEW SET PRIOR TO BUILDING OCCUPANCY.
25. COVER ALL OPENINGS IN EQUIPMENT, PIPING, DUCTS, AND OTHER SYSTEMS TO EXCLUDE ENTRANCE OF DIRT OR OTHER FOREIGN MATERIAL DURING CONSTRUCTION.

DRAWING INDEX

SHEET NO.	DESCRIPTION	10/XX/20	PERMIT
M-0.0	COVER SHEET – MECHANICAL	•	
M-0.1	SCHEDULES – MECHANICAL	•	
M-2.1	FLOOR PLAN – MECHANICAL	•	
M-3.2	PARTIAL ROOF PLAN – MECHANICAL	•	
		•	
		•	

MECHANICAL LEGEND

SYMBOL	DESCRIPTION
	EXISTING HVAC TO REMAIN
	EXISTING HVAC TO BE REMOVED
20x12	DUCT – INSIDE CLEAR DIMENSIONS IN INCHES 1ST DIMENSION, SIDE SHOWN 2ND DIMENSION, NOT SHOWN ø – ROUND DUCT INSIDE CLEAR DIAMETER IN INCHES
	DUCT TRANSITION
	DUCT CAP
F	FIRE DAMPER
	MANUAL VOLUME DAMPER
	RADIUS ELBOW (MIN R/D = 1.0)
	SUPPLY OR OUTSIDE AIR DUCT UP
	SUPPLY OR OUTSIDE AIR DUCT DOWN
	RETURN AIR DUCT UP
	RETURN AIR DUCT DOWN
	EXHAUST AIR DUCT UP
	EXHAUST AIR DUCT DOWN
	ROUND DUCT UP
	ROUND DUCT DOWN
T	DUCT TEMPERATURE SENSOR
H	DUCT HUMIDITY SENSOR
SD	DUCT SMOKE DETECTOR
	SUPPLY AIR TAKEOFF
	SUPPLY AIR TAKEOFF – BELLMOUTH SPIN-IN FITTING WITH DAMPER
	RECTANGULAR SUPPLY DIFFUSER FOUR-WAY AIRFLOW DIRECTION UNLESS OTHERWISE NOTED
	RECTANGULAR RETURN GRILLE
	RECTANGULAR EXHAUST GRILLE
	SIDEWALL REGISTER (SUPPLY)
	SIDEWALL REGISTER (RETURN OR EXHAUST)
	POINT OF CONNECTION
	POINT OF DISCONNECTION
#	KEYNOTE
— CD —	CONDENSATE DRAIN
T	ROOM WALL MOUNTED TEMPERATURE SENSOR

AUTOMATIC SHUTOFF FOR AIR MOVING EQUIPMENT REQUIREMENTS

1. ALL AIR MOVING SYSTEMS SUPPLYING AIR IN EXCESS OF 2,000 CFM, INCLUDING MULTIPLE SYSTEMS COMPRISED OF SMALLER UNITS SERVING THE SAME SPACE(S) AND SUPPLYING AN AGGREGATE AIRFLOW GREATER THAN 2,000 CFM, SHALL BE EQUIPPED WITH AUTOMATIC SHUTOFF PER SECTION 608 OF SOUTHERN NEVADA AMENDMENTS TO THE 2018 UNIFORM MECHANICAL CODE.
2. AUTOMATIC SHUTOFFS SHALL BE PROVIDED AND INSTALLED WHETHER OR NOT INDICATED ON THE PLANS.
3. CONTRACTOR SHALL PROVIDE AND INSTALL ALL REQUIRED COMPONENTS AND APPURTENANCES, INCLUDING, BUT NOT LIMITED TO SMOKE DETECTORS, DUCT MOUNTED SMOKE DETECTORS, CONDUIT/WIRING, PROGRAMMING, ELECTRICAL DEVICES, INTERFACE WITH FIRE ALARM SYSTEM, 3RD PARTY TESTING/APPROVAL AND WITNESS TESTING PER LOCAL AHJ REQUIREMENTS.
4. COORDINATE WORK WITH ALL TRADES TO PROVIDE A COMPLETE, OPERABLE AND CODE COMPLIANT SYSTEM.

MATERIAL SPECIFICATIONS

MATERIAL	SPECIFICATIONS
DUCTWORK	ENVIRONMENTAL AIR DUCTS: GALVANIZED SHEET METAL PER SMACNA AND UMC (UNIFORM MECHANICAL CODE) CONNECTED TO TYPE I HOODS (EXPOSED): WELDED 18 GAUGE 304 STAINLESS STEEL PER NFPA 96 AND UMC SECTION 510 CONNECTED TO TYPE I HOODS (CONCEALED): WELDED 16 GAUGE BLACK STEEL PER NFPA 96 AND UMC SECTION 510
FLEXIBLE DUCTWORK	EQUAL TO THERMAFLEX M-KC, PER NFPA 90A, NFPA 90B, UL 181, MAXIMUM FLAME SPREAD 25, MAXIMUM SMOKE DEVELOPED INDEX 50, R 6.0 PER ASTM C-518, TO BE SUPPORTED WITHOUT SAGS AND UP TO MAXIMUM LENGTH OF 7'. AND ONLY WITHIN CONCEALED SPACES.
SUPPLY AND RETURN AIR DUCTWORK INSULATION	UNCONDITIONED SPACE (INCLUDING RETURN AIR PLENUMS): WRAP WITH 2" THICK, 3/4 PCF GLASS FIBER INSULATION WITH FSK FACING, MIN. R-VALUE OF 6 (k VALUE OF 0.27 AT 75° F), PER ASTM C 553, MAXIMUM FLAME SPREAD 25, MAXIMUM SMOKE DEVELOPED INDEX OF 50, INSTALL PER MANUFACTURER'S RECOMMENDATIONS. NON-CONDITIONED SPACE: MIN. R-VALUE OF 8
GREASE EXHAUST DUCTWORK	KITCHEN HOOD EXHAUST DUCTWORK SHALL BE 16 GAUGE (MINIMUM, 11 GAUGE MAXIMUM) BLACK STEEL CONSTRUCTION. KITCHEN HOOD EXHAUST DUCTWORK SHALL BE CONSTRUCTED IN ACCORDANCE WITH NFPA 96 WITH EXTERNAL WELDS; MAINTAIN REQUIRED DUCT CROSS-SECTIONAL AREA UP TO FAN INLET, IN ORDER TO PRESERVE 1500 FEET PER MINUTE MINIMUM VELOCITY WITHIN DUCT. FOR AIR FLOW MEASUREMENT, PROVIDE 3/4 INCH DIAMETER THREADED HEX NUT WELDED TO THE VERTICAL WALL OF DUCT; POSITION ALONG THE CENTERLINE OF A STRAIGHT SEGMENT OF THE DUCT. PROVIDE HEX HEAD BOLT WITH TOOTHED LOCK WASHER TO SERVE AS PLUG; CUT BOLT FLUSH WITH INSIDE OF DUCT. INSULATE KITCHEN HOOD EXHAUST DUCTWORK WITH THERMAL CERAMICS FIREMASTER DUCT WRAP SYSTEM FOR GREASE DUCT AND EXHAUST SYSTEMS, PREMIER PYROSCAT FP DUCT WRAP FIRE PROTECTION SYSTEM, OR UNITARX FYREWRAP DUCT INSULATION SYSTEM LISTED PER U.L. YYET FOR GREASE DUCT ENCLOSURES IN ACCORDANCE WITH SBCCI ACCEPTANCE CRITERIA. INSULATION SYSTEM SHALL INCLUDE TWO LAYERS OF 1-1/2 INCH THICKNESS FOIL ENCAPSULATED DUCT WRAP INSULATING MATERIAL, FILAMENT TAPE, BANDING MATERIAL, INSULATION PINS AND ALL ACCESSORIES REQUIRED FOR A COMPLETE U.L. CLASSIFIED SYSTEM FOR GREASE DUCT APPLICATIONS. INSTALL INSULATING SYSTEM IN ACCORDANCE WITH MANUFACTURER'S REQUIREMENTS, FOR ZERO CLEARANCE TO COMBUSTIBLE CONSTRUCTION.

PROFESSIONAL ENGINEER – STATE OF NEVADA
RADE KECMAN
MECHANICAL
No. 19901

REVISIONS

#	DATE	DESCRIPTION

TURPIN & RATTAN ENGINEERING, INC.
CONSULTING MECHANICAL ENGINEERS
5888 W. SUNSET RD, SUITE 201
LAS VEGAS, NEVADA 89118
702/834/3880
TREI # 20337

GENERAL CONTRACTOR:
RED MESA BUILDERS
NEVADA CONTRACTORS B#81273
OFFICE: (702) 434-0046 FAX: (702) 434-0051
joe@redmesabuilders.com
4023 W. OQUENDO RD. STE B
LAS VEGAS NV 89118

PROJECT:
T. I. FOR DAIRY QUEEN AT
7955 BLUE DIAMOND ROAD, LAS VEGAS, NEVADA

SHEET TITLE:
COVER SHEET – MECHANICAL

DESIGN CORE
ARCHITECTURE – PLANNING – INTERIORS
JIM BERENDJI, ARCHITECT, A.I.A.
P. O. BOX 778425, HENDERSON, NV 89077
PHONE: (702) 731-0293 berendji@embarqmail.com

DATE: 10-2-20
SCALE: AS NOTED
JOB #: 201001

M-0.0

FILE: C:\PROJECTS\JOE-RED-MESA\DAIRYQEEN-BLUDIAMOND\A-1.1.DWG DATE: 26 OCT 2020 TIME: 11:02 AM

AIR DEVICE SCHEDULE

TAG	TYPE	STYLE	SIZE	NECK SIZE	CFM RANGE	NC MAX	THROW (TYPE/FT)	TOTAL PRESSURE ("WC)	MATERIAL	MFR/MODEL NO. OR EQUAL	NOTES
S-1 / –	SUPPLY AIR DIFFUSER	SQUARE CEILING 3-CONE	24"x24"	8"ø	0–200	11	4-WAY 3-4-8	0.04	STEEL	TITUS TMS	2, 3, 6
S-2 / –	SUPPLY AIR DIFFUSER	SQUARE CEILING 3-CONE	24"x24"	10"ø	201–400	16	4-WAY 5-7-14	0.06	STEEL	TITUS TMS	2, 3, 6
S-3 / –	SUPPLY AIR DIFFUSER	SQUARE CEILING MODULAR CORE	12"x12"	6"x6"	0–200	30	4-WAY 7-9-13	0.04	STEEL	TITUS MCD	2, 3, 5
R-1 / –	RETURN GRILLE	SQUARE CEILING EGGCRATE	24"x24"	–	–	–	N/A	–	STEEL	TITUS 50F	2, 3, 6

NOTES:

1) ALUMINUM CONSTRUCTION. 2) STEEL CONSTRUCTION 3) CONFIRM BORDER TYPE, TRIM, FINISH AND COLOR WITH ARCHITECTURAL CEILING PLANS AND CONFIRM WITH OWNER PRIOR TO ORDERING 4) DIFFUSER TO BE HARD DUCTED FOR FREE HANGING MOUNTING 5) BORDER TYPE 1 FOR SURFACE MOUNT 6) BORDER TYPE 3 FOR LAY-IN (T-BAR) CEILING

PACKAGED ROOFTOP A/C UNIT SCHEDULE

MARK	MANUFACTURER AND MODEL # OR EQUAL	LOCATION	SERVES	COOLING DATA: TOTAL MBH	SENS. MBH	EAT °F DB	EAT °F WB	AMBIENT TEMP	HEATING DATA: FUEL	CAP MBH IN	CAP MBH OUT	SUPPLY FAN DATA: CFM	MIN OSA	HP	ESP	ELECTRICAL DATA: V/HZ/PH	COMP RLA	INDOOR MOTOR FLA	MCA	MOCP	MIN SEER (EER)	APPROX. WEIGHT LBS.	NOTES
RTU 1	CARRIER 48HCDD11A2A5-0A0G0	ROOF	KITCHEN	101.57	89.54	80.6	64.3	115	NAT GAS	158	130	4000	150	3	0.6	208/60/3	15.9/15.9	10.8	54	60	(12.0)	1386	1, 2, 3, 4, 5, 6
RTU 2	CARRIER 48HCDD11A2A5-0A0G0	ROOF	DINING ROOM	101.57	89.54	80.6	64.3	115	NAT GAS	158	130	4000	565	3	0.6	208/60/3	15.9/15.9	10.8	54	60	(12.0)	1386	1, 2, 3, 4, 5, 6

NOTES:
1. PROVIDE FACTORY ROOF CURB AND VIBRATION ISOLATION.
2. PROVIDE SINGLE POINT POWER CONNECTION AND INTEGRAL DISCONNECT.
3. PROVIDE FACTORY THERMOSTAT-HEAT/COOL/FAN WITH AUTO CHANGEOVER.
4. PROVIDE ENTHALPY ECONOMIZER WITH BAROMETRIC RELIEF.
5. SMOKE DETECTOR
6. MERV 8 FILTERS.

EXHAUST FAN SCHEDULE

NOTES: 1) 24" HIGH ROOF CURB 2) GREASE BOX 3) FAN BASE CERAMIX SEAL 4) UPBLAST FAN WHEEL ACCESS PORT 5) EXHAUST FAN HEAT BAFFLE 6) ECM WIRING PACKAGE 7) ROOF CAP

GENERAL DATA: TAG	MANUFACTURER OR EQUAL	MODEL NO. OR EQUAL	AREA SERVED	LOCATION	TYPE	DESIGN: CFM	E.S.P. (IN)	FAN RPM	ELECTRICAL DATA: MOTOR HP/(WATTS)	FLA	V/HZ/PH	CONTROL	NOTES	OPERATING WEIGHT (LB)
KEF 1	CAPTIVEAIRE	DU85HFA	KITCHEN	ROOF	CENTRIFUGAL	2148	0.78	1385	1	11.6	115/60/1	KITCHEN HOOD	1,2,3,4,5,6	99
EF 1	GREENHECK	SP-B150	RESTROOMS	CEILING	CEILING	150	0.5	1050	(128)	–	115/60/1	LIGHTS	7	10

MAKE-UP AIR SCHEDULE

NOTES: 1) EVAPORATIVE COOLER WIRING HARNESS 2) COOLING THERMOSTAT, 2 STAGE, 10 DEGREE DIFFERENTIAL 3) MOTORIZED BACKDRAFT DAMPER 4) ECM WIRING PACKAGE

GENERAL DATA: TAG	MANUFACTURER	MODEL NO.	AREA SERVED	LOCATION	HOUSING	DESIGN: CFM	E.S.P. (IN.)	ELECTRICAL DATA: MOTOR HP/(WATTS)	FLA	V/PH/HZ	CONTROL	REMARKS	OPERATING WEIGHT (LBS.)
MAU 1	CAPTIVEAIRE	A1-16Z	KITCHEN HOOD	ROOF	A1	1826	0.5	2.5	5.7	208/3/60	INTERLOCKED	1, 2, 3, 4	1435

OUTSIDE AIR CALCULATION

SPACE NAME	AREA (SF)	OCCUPANT LOAD FACTOR (SF/PERSON)	PEOPLE	PEOPLE OUTDOOR AIR RATE (CFM/PERSON)	AREA OUTDOOR AIR RATE (CFM/SF)	MINIMUM OUTDOOR AIRFLOW (CFM)
RESTAURANT	826	15	55	7.5	0.18	565
KITCHEN	1375	200	7	15	–	105
	2201	SUB-TOTAL	62		SUB-TOTAL	670

NOTES:
1) OUTSIDE AIR CALCULATIONS PER UMC CHAPTER 4, TABLE 402.1
2) PROVIDE MINIMUM OUTDOOR AIRFLOW OF 670 CFM.
3) OCCUPANT LOAD BASED ON ARCHITECTS PLANS.
4) KITCHEN OUTSIDE AIR PROVIDED BY MAU-1 AND RTU-1.

KITCHEN AIR BALANCE SCHEDULE

TAG	OUTSIDE AIR	RETURN AIR	SUPPLY AIR	EXHAUST AIR	PRESSURE
KITCHEN RTU-1	150	3850	4000	–	+150
KITCHEN KEF-1	–	–	–	2148	-2148
KITCHEN MAU-1	1826	–	–	–	+1826
TOTAL	1976	3850	4000	2148	-172

DINING AREA AIR BALANCE SCHEDULE

TAG	OUTSIDE AIR	RETURN AIR	SUPPLY AIR	EXHAUST AIR	PRESSURE
DINNING RTU-2	565	3435	4000	–	+565
RESTROOM EF-1	–	–	–	150	-150
RESTROOM EF-1	–	–	–	150	-150
TOTAL	565	3435	4000	300	+265

BUILDING AIR BALANCE SCHEDULE

OUTSIDE AIR	RETURN AIR	SUPPLY AIR	EXHAUST AIR	PRESSURE
2541	7285	8000	2448	+93

COMcheck Software Version 4.1.1.0

Mechanical Compliance Certificate

Project Information

Energy Code: 2018 IECC
Project Title: Dairy Queen
Location: Las Vegas, Nevada
Climate Zone: 3b
Project Type: Alteration

Construction Site:
7955 Blue Diamond Road
Las Vegas, NV 89178

Owner/Agent:

Designer/Contractor:
Joe Cusimano
Turpin and Rattan
588 W Sunset Road
Las Vegas, NV 89118

Mechanical Systems List

Quantity System Type & Description

2 RTU-1.2 (Single Zone):
Heating: 1 each - Central Furnace, Gas, Capacity = 130 kBtu/h
Proposed Efficiency = 80.00% Et, Required Efficiency: 80.00 % Et or 80% AFUE
Cooling: 1 each - Single Package DX Unit, Capacity = 102 kBtu/h, Air-Cooled Condenser, Air Economizer
Proposed Efficiency = 12.00 EER, Required Efficiency: 11.00 EER + 12.6 IEER
Fan System: 3 -- Compliance (Motor nameplate HP method) : Passes

Fans:
FAN 1 Supply, Constant Volume, 4000 CFM, 3.0 motor nameplate hp, 0.0 fan efficiency grade

Mechanical Compliance Statement

Compliance Statement: The proposed mechanical alteration project represented in this document is consistent with the building plans, specifications, and other calculations submitted with this permit application. The proposed mechanical systems have been designed to meet the 2018 IECC requirements in COMcheck Version 4.1.1.0 and to comply with any applicable mandatory requirements listed in the Inspection Checklist.

Rade Kecman P.E. — Name - Title
Signature
11/16/20 — Date

Project Title: Dairy Queen — Report date: 11/16/20
Data filename: V:\PROJECT FILES\20\20337.L00 - DQ TI Blue Diamond\20337.M\Calculations\comcheck\DQ at Mtns Edge.cck — Page 1 of 11

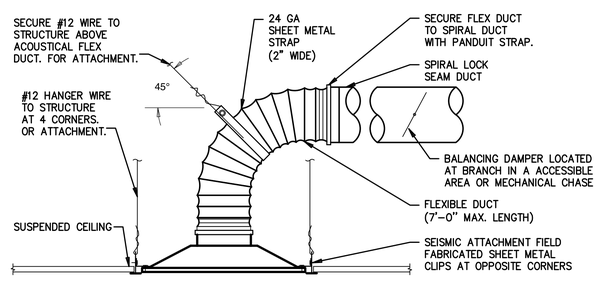

NOTES

1. REFER TO SPECIFICATIONS FOR DUCTWORK INSULATION REQUIREMENTS.
2. IN LIEU OF THE SEISMIC ATTACHMENT CLIPS THE CONTRACTOR CAN PROVIDE CEILING DIFFUSERS WITH EARTHQUAKE TABS SECURE TO THE STRUCTURE WITH 12 GA WIRE.
3. IN LIEU OF SUPPORTING THE DUCT WITH 12 GAUGE WIRE THE CONTRACTOR CAN PROVIDE 2"-24 GA SHEETMETAL STRAP SECURED TO STRUCTURE.
4. PROVIDE MINIMUM RADIUS OF 1.5 DUCT DIAMETER FROM CENTER LINE OF DUCT.
5. NO OPPOSED BLADE BALANCING DAMPER UNLESS NOTES OTHERWISE.

ROUND NECK CEILING DIFFUSER

NO SCALE — 2 / M0.1

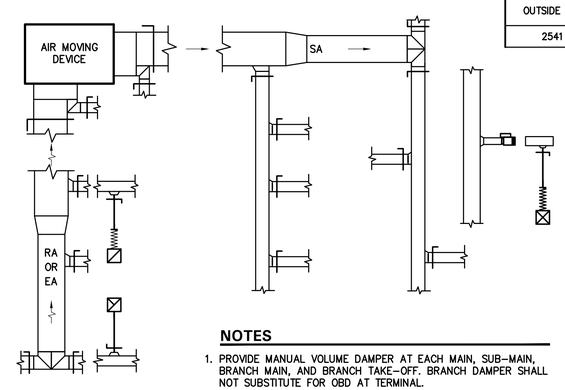

NOTES

1. PROVIDE MANUAL VOLUME DAMPER AT EACH MAIN, SUB-MAIN, BRANCH MAIN, AND BRANCH TAKE-OFF. BRANCH DAMPER SHALL NOT SUBSTITUTE FOR OBD AT TERMINAL.
2. PROVIDE CEILING ACCESS TO ALL DAMPERS

TYPICAL MANUAL VOLUME DAMPER LOCATION DIAGRAM

NO SCALE — 1 / M0.1

PROFESSIONAL ENGINEER - STATE OF NEVADA — RADE KECMAN — No. 10001 — MECHANICAL

REVISIONS

#	DATE	DESCRIPTION

TURPIN & RATTAN
ENGINEERING, INC.
MECHANICAL ELECTRICAL PLUMBING ENGINEERS
588 W. SUNSET RD. SUITE 151
LAS VEGAS, NEVADA 89118
(702) 734-7200
TRE # 20337

GENERAL CONTRACTOR:
RED MESA BUILDERS
NEVADA CONTRACTORS B#81273
OFFICE: (702) 434-0046 FAX: (702) 434-0051
joe@redmesabuilders.com
4023 W. QUENDO RD. STE B
LAS VEGAS NV 89118

PROJECT: T. I. FOR DAIRY QUEEN AT 7955 BLUE DIAMOND ROAD, LAS VEGAS, NEVADA

SHEET TITLE: SCHEDULES – MECHANICAL

DESIGN CORE
ARCHITECTURE – PLANNING – INTERIORS
JIM BERENDJI, ARCHITECT, A.I.A.
P. O. BOX 778425, HENDERSON, NV 89077
PHONE: (702) 731-0293 berendji@embarqmail.com

DATE: 10-2-20
SCALE: AS NOTED
JOB #: 201001

M-0.1

FILE: C:\PROJECTS\JOE-RED-MESA\DAIRYQUEEN-BLUEDIAMOND\A-113.DWG DATE: 26 OCT 2020 TIME: 11:02 AM

ICC EVALUATION SERVICE | Most Widely Accepted and Trusted

ICC-ES Evaluation Report

ESR-1255

Reissued May 2018
Revised July 2019
This report is subject to renewal May 2020.

www.icc-es.org | (800) 423-6587 | (562) 699-0543 *A Subsidiary of the International Code Council®*

DIVISION: 07 00 00—THERMAL AND MOISTURE PROTECTION
Section: 07 81 33—Mineral-Fiber Fireproofing

REPORT HOLDER:

3M FIRE PROTECTION PRODUCTS

EVALUATION SUBJECT:

3M FIRE BARRIER DUCT WRAP 615+ BLANKET FOR GREASE DUCT ENCLOSURE ASSEMBLIES

1.0 EVALUATION SCOPE

Compliance with the following codes:

- 2018, 2015, 2012 and 2009 *International Building Code®* (IBC)
- 2018, 2015, 2012 and 2009 *International Mechanical Code®* (IMC)
- 2018, 2015, 2012 and 2009 IAPMO *Uniform Mechanical Code* (UMC)
- Other Codes (see Section 8.0)

Properties evaluated:

- Durability
- Fire resistance
- Noncombustibility
- Surface burning characteristics

2.0 USES

The 3M Fire Barrier Duct Wrap 615+ is a flexible blanket used to construct zero-clearance, fire-resistance-rated grease duct enclosure assemblies serving Type I kitchen hoods. The duct wrap material complies with 2018, 2015, 2012 IMC Section 506.3.11.2 (2009 IMC Section 506.3.10.2) and 2018 IAPMO UMC Sections 507.4.5 and 507.4.6 [(2015 IAPMO UMC Sections 507.3.5 and 507.3.6), (2012 IAPMO UMC Sections 507.2.5 and 507.2.6), (2009 IAPMO UMC Sections 507.2.6 and 510.7.3.1), and is an alternative to the one- and two-hour fire-resistance-rated enclosure requirements of 2018, 2015 and 2012 IBC Section 713.4 (2009 IBC Section 708.4) and 2018, 2015 and 2012 IAPMO UMC Section 510.7 (2009 IAPMO UMC Section 510.7.1), when installed in accordance with Section 4.0.

3.0 DESCRIPTION

3.1 Materials:

3.1.1 3M Fire Barrier Duct Wrap 615+ Blanket: The blanket consists of a monolithic layer of proprietary soluble, vitreous alkaline earth oxide (calcium-, silicone-, magnesium-oxide) fiber material encapsulated in a foil scrim, having a total nominal thickness of $1^1/_2$ inches. It is packaged in rolls 25 feet (7.6 m) long and either 24 inches (610 mm) or 48 inches (1219 mm) wide. The blankets have a nominal density of 6 pcf and have a flame-spread index of 25 or less and a smoke-developed index of 50 or less when tested in accordance with ASTM E84. The 615+ blanket is classified as noncombustible when tested in accordance with ASTM E136.

3.1.2 Banding Material: Banding material must be minimum $^1/_2$-inch-wide (12.7 mm), 0.015-inch-thick (3.8 mm) stainless steel or carbon steel strap. Tools used for banding are a hand tensioner and a clip seal crimping tool.

3.1.3 Duct System: The duct must comply with Section 506.3 of the IMC or Sections 510.1, 510.4 or 510.5 of the IAPMO UMC, as applicable. Under the IMC, grease ducts serving Type I hoods must be constructed either of minimum 0.0575-inch-thick (1.46 mm) (No. 16 gage) steel or of stainless steel at least 0.045 inch (1.14 mm) thick. Under the 2018 and 2015 IAPMO UMC, grease ducts serving Type I hoods must be constructed either of minimum 0.060-inch-thick (1.524 mm) (No, 16 MSG) steel or of stainless steel not less than 0.048 inch (1.219 mm) (No. 18 MSG) thick. Under the 2012 and 2009 IAPMO UMC, grease ducts serving Type I hoods must be constructed either of minimum 0.054-inch-thick (1.37 mm) (No. 16 MSG) steel or of stainless steel not less than 0.043 inch (1.09 mm) (No. 18 MSG) thick. Joints and seams of grease ducts must comply with Section 506.3.2 of the IMC, or Section 510.5.3 of the 2018 and 2015 IAPMO UMC (Section 510.5.2 of the 2012 and 2009 IAPMO UMC). Duct supports must comply with Section 506.3.3 of the IMC, or Sections 510.1.6 and 510.5.1 of the 2018, 2015, 2012 and 2012 IAPMO UMC (2009 IAPMO UMC Sections 510.1.7 and 510.5.1), as applicable, and Section 4.2.3 of this report. Maximum duct size is 48 inches by 24 inches (1219 mm by 610 mm). Under IMC Section 506.3.2.5 or 2018 and 2015 IAPMO UMC Section 510.5.3.1, prior to the use or concealment of any portion of the grease duct system, a leakage test must be performed to determine that all welded joints and seams are liquid tight.

ICC-ES Evaluation Reports are not to be construed as representing aesthetics or any other attributes not specifically addressed, nor are they to be construed as an endorsement of the subject of the report or a recommendation for its use. There is no warranty by ICC Evaluation Service, LLC, express or implied, as to any finding or other matter in this report, or as to any product covered by the report.

Copyright © 2019 ICC Evaluation Service, LLC. All rights reserved.

3.1.4 Sealants: 3M Fire Barrier 1000 N/S Silicone Sealant (Non-Slump) and 3M Fire Barrier 1003 S/L Silicone Sealant (Self-Leveling) are ready-to-use, one-component silicone elastomers used in through-penetration fire-stop assemblies described in Section 4.2.4. The sealants are packaged in cartridges and have a shelf life of 12 months from date of packaging when stored in a clean, dry area with temperatures between 40°F and 90°F (4.4°C and 32.2°C).

3.1.5 3M Fire Barrier Grease Duct Access Door and DuctMate ULtimate Door: The rectangular prefabricated access doors are UL listed Hood and Duct Accessories. The access doors are provided in three sizes: 12 inches by 8 inches (305 mm by 203 mm), 14 inches by 10 inches (356 mm by 254 mm) and 22 inches by 22 inches (559 mm by 559 mm). The access door assembly consists of the 3M access door, four $^1/_4$-inch-diameter (6.4 mm) threaded extension rods, three layers of the 615+ blanket, a No. 16 gage cover plate, and wing nuts and washers.

4.0 INSTALLATION

4.1 General:

The Duct Wrap 615+ wrap materials are installed with zero clearance from the ducts, and may be installed with zero clearance from the insulating material to combustible construction. Grease ducts protected with Duct Wrap 615+ are permitted to penetrate nonfire-resistance-rated wall, floor-ceiling and roof-ceiling assemblies, provided the duct is protected from the point of penetration in accordance with this report. The systems are also permitted to penetrate fire-resistance-rated assemblies when the through-penetration is protected in accordance with Section 4.2.4 of this report. The systems comply with the requirements of IMC Section 602.2.1 and IAPMO UMC Section 602.2 for installation in plenums. The field-applied grease duct enclosure assemblies must be installed in accordance with IAPMO UMC Section 510.7.4.

4.2 Two-hour Fire-resistance-rated Enclosure Assembly:

4.2.1 Enclosure Assembly: The duct must be installed in accordance with IMC Section 506.3 or IAPMO UMC Sections 510.1, 510.4 or 510.5, as applicable. Ducts must have a maximum 48-inch-by-24-inch (610 mm by 1219 mm) cross-sectional opening. A total of two layers of blanket material is installed around the grease duct, using one of the four overlap techniques illustrated in Figure 1. Adjacent blankets on the inside layer are installed with either tight butt-joints between blankets or 3-inch (76 mm) perimeter and longitudinal overlaps. Edge joints of the second layer must be offset $10^1/_2$ inches (267 mm) from those of the first layer. The second layer of blanket material must have minimum 3-inch (76 mm) perimeter and longitudinal overlaps. Before the insulation is applied on ducts of 24 inches and larger, 7-inch-long (178 mm), No. 12 gage, copper-coated, mild steel impaling pins must be welded to the duct on the underside of horizontal assemblies and vertical assemblies spaced as illustrated in Figure 1B. Galvanized, mild steel speed washers must be placed over each impaling pin to secure the blanket. Steel banding straps must be placed circumferentially, $1^1/_2$ inches (38 mm) from the edge of the blanket and at $10^1/_2$ inches (267 mm) on center. Material must not be installed that has been abused or damaged, e.g., stepped on, unintentionally cut or ripped. The tension in the banding straps must be sufficient to firmly retain the blanket materials, but not to unduly compress the blanket, and must not be so great as to cause any cutting or damage or compression to the blanket material. Seven-inch-long (178 mm), No. 12 gage, copper-coated, mild steel impaling pins, welded to the duct as shown in Figure 1B, can be used as an alternative to steel banding straps on any size duct.

4.2.2 Grease Duct Access Doors:

4.2.2.1 General: Grease duct access doors must comply with IMC Section 506.3.8 and IAPMO UMC Section 510.3, as applicable.

4.2.2.2 Prefabricated Access Doors: The 3M Fire Barrier Grease Duct Access Door Assembly or Ductmate Ultimate Doors are installed as illustrated in Figure 3. Three layers of the 615+ blanket must be installed over the access door such that each layer overlaps the preceding layer by 1 inch (25 mm) on all four sides. Edges of the outer layer of insulation blanket must be sealed with aluminum foil tape. A No. 16 gage steel plate the same size as the outer layer of insulation blanket must be secured over the outer layer of insulation.

4.2.2.3 Field-fabricated Access Doors: The access doors must be protected with three layers of 3M Fire Barrier Duct Wrap 615+ blanket material as illustrated in Figures 2 and 3. The first layer of blanket is cut the same size as the door, and the subsequent layers must overlap the previous layer by 1 inch (25.4 mm). Access door labels must be applied to all access doors.

4.2.3 Duct Support: Horizontal duct assemblies with maximum cross-sectional openings of 24 inches by 24 inches (610 mm by 610 mm) must be supported with minimum $^3/_8$-inch-diameter (9.5 mm), all-thread steel rod and 2-inch-by-2-inch-by-$^1/_8$-inch (51 mm by 51 mm by 3.2 mm) steel angle, spaced a maximum of 60 inches (1524 mm) on center. A minimum clearance of 0 inch and a maximum clearance of 6 inches (152 mm) is required between the vertical edge of the blanket material surrounding the duct and the steel rod.

Horizontal duct assemblies with maximum dimensions of 24 inches by 48 inches (610 mm by 1219 mm) must be supported with minimum $^1/_2$-inch-diameter (12.7 mm), all-thread steel rod and 2-inch-by-2-inch-by $^1/_4$-inch (51 mm by 51 mm by 6.4 mm) steel angle spaced a maximum of 60 inches (1524 mm) on center. A minimum clearance of 0 inch (0 mm) and a maximum clearance of 6 inches (152 mm) is required between the vertical edge of the blanket material surrounding the duct and the steel rod.

Vertical assemblies must be supported as shown in Figure 4. Vertical ducts must be supported at every floor line on the top of the slab.

4.2.4 Through-penetration Fire-stop Assemblies: See Table 1 and Figures 4 and 5 for descriptions of various through-penetration firestop assemblies that are used with the 3M Fire Barrier Duct Wrap 615+ system. The forming material placed in the annular space must be compressed to fill the space. The forming material must be recessed the appropriate depth (identified as Sealant Depth in Table 1) for application of the sealant. The sealant must be flush with the wall or floor surface. On floors, the sealant must be overlapped onto the floor approximately 1 inch (25.4 mm) and onto the insulated duct approximately $^1/_4$ inch (6.4 mm).

5.0 CONDITIONS OF USE

The 3M Fire Barrier Duct Wrap 615+ grease duct enclosure assembly described in this report complies with, or is a suitable alternative to what is specified in, those codes listed in Section 1.0 of this report, subject to the following conditions:

5.1 The enclosure systems must be constructed and installed in accordance with this report. In the event of a conflict between this report and the manufacturer's instructions, this report governs.

5.2 The blanket materials are manufactured for 3M in Coahuila, Mexico, under a quality control program with inspections by ICC-ES.

6.0 EVIDENCE SUBMITTED

Data in accordance with ASTM E2336 and the ICC-ES Acceptance Criteria for Field-applied Grease Duct Enclosure Assemblies (AC101.1), dated December 2012 (editorially revised October 2018).

7.0 IDENTIFICATION

7.1 The 3M Fire Barrier Duct Wrap 615+ blanket material must bear a label indicating the product name, the 3M Fire Protection Products name and address, clearance to combustible construction in accordance with the applicable code, and the evaluation report number (ESR-1255). The wording "Fire-resistive Enclosure, Do Not Remove" must be printed on the blankets at maximum 24-inch (610 mm) intervals.

The 3M Fire Barrier Duct Wrap 615+ blanket material covering access opening panels shall be labeled with the wording "ACCESS PANEL. DO NOT OBSTRUCT." As an alternative to labeling the insulation material, a sign including "ACCESS PANEL. DO NOT OBSTRUCT." must be installed in the field over the insulation material covering the access opening panels.

The 3M Fire Barrier Grease Duct Access Doors are identified by a label bearing the 3M Company name and address, and the product name.

The Ductmate Ultimate Doors are identified by a label bearing the Ductmate Industries, Inc.'s name and address, and the product name.

Sealants must be identified by the 3M company name and address, and the product name.

7.2 The report holder's contact information is the following:

3M FIRE PROTECTION PRODUCTS
3M CENTER, BUILDING 223-2N-20
ST. PAUL, MINNESOTA 55144-1000
(651) 733-0973
www.3m.com/firestop

8.0 OTHER CODES:

In addition to the codes referenced in Section 1.0, the products described in this report were evaluated for compliance with the requirements of the following codes:

- 2006 *International Building Code®* (2006 IBC)
- 2006 *International Mechanical Code®* (2006 IMC)
- 2006 IAPMO *Uniform Mechanical Code* (2006 UMC)
- 2003 *International Building Code®* (2003 IBC)
- 2003 *International Mechanical Code®* (2003 IMC)
- 2003 IAPMO *Uniform Mechanical Code* (2003 UMC)

The products comply with the above-mentioned codes as described in Sections 2.0 through 7.0 of this report, except the applicable code sections are as follows for the report sections cited:

- Section 2.0:
  - — Grease duct enclosures:
    - 2006 and 2003 IMC Section 506.3.10
  - — Shaft enclosures:
    - 2006 and 2003 IBC Section 707.4
    - 2006 and 2003 UMC Section 510.7.1
- Section 3.2:
  - — Joints and seams of grease ducts:
    - 2006 and 2003 IMC Section 506.3.2
    - 2006 and 2003 UMC Section 510.5.2
  - — Duct supports:
    - 2006 and 2003 IMC Section 506.3.3
    - 2006 and 2003 UMC Sections 510.1.7 and 510.5.1
- Section 4.1:
  - — 2006 and 2003 IMC Section 602.2.1
  - — 2006 and 2003 UMC Section 602.2
- Section 4.2.2.1:
  - — 2006 IMC Section 506.3.8
  - — 2003 IMC Sections 506.3.9 and 506.3.11
  - — 2006 and 2003 UMC Section 510.3

TABLE 1—THROUGH-PENETRATION FIRESTOP ASSEMBLIES[1]

MAXIMUM DUCT SIZE (inches by inches)	WALL, FLOOR OR CEILING CONSTRUCTION	ANNULAR SPACE (inches)		PENETRATION FIRESTOP		FIRE-RESISTANCE RATING (hours)	
		Min.	Max.	Forming Materials	Sealant Depth (inches)	F-Rating	T-Rating
24 × 30, wrapped with 3M Duct Wrap through-penetration	No. 25 gage steel studs with one layer of $^5/_8$-inch gypsum board on both sides	$^5/_8$	$3^1/_2$	Unfaced 3M Duct Wrap or min. 4 pcf mineral wool compressed 25 percent	$^5/_8$, both sides	1	NA
24 × 30, wrapped with 3M Duct Wrap through-penetration	No 25 gage steel studs with two layers of $^5/_8$-inch gypsum board on both sides	1	$3^1/_2$	Unfaced 3M Duct Wrap or min. 4 pcf mineral wool compressed to fill the annular space	$^5/_8$, both sides	2	NA
24 × 30, wrapped with 3M Duct Wrap through-penetration	2-by-10 wood joists, with $^5/_8$-inch gypsum board on the bottom side and $^3/_4$-inch plywood on the top side	1	$2^1/_2$	Unfaced 3M Duct Wrap or min. 4 pcf mineral wool compressed 25 percent	$^3/_4$, top surface	1	1
24 × 30, wrapped with 3M Duct Wrap through-penetration	$4^1/_2$-inch reinforced concrete slab	$1^1/_4$	$2^1/_2$	Unfaced 3M Duct Wrap or min. 4 pcf mineral wool compressed to fill the annular space	$^7/_{16}$, top surface	2	2
24 × 30, bare duct through-penetration	$4^1/_2$-inch reinforced concrete slab	1	2	Unfaced 3M Duct Wrap or min. 4 pcf mineral wool compressed 25 percent	$^3/_8$, top surface	2	2
24 × 48, wrapped with 3M Duct Wrap through-penetration	$4^1/_2$-inch reinforced concrete slab	1	$4^1/_2$	Unfaced 3M Duct Wrap or min. 4 pcf mineral wool compressed 56 percent	$^1/_4$, top surface	2	2

For **SI:** 1 inch = 25.4 mm.

[1]See Figure 4 and Figure 5 for an illustration of components.

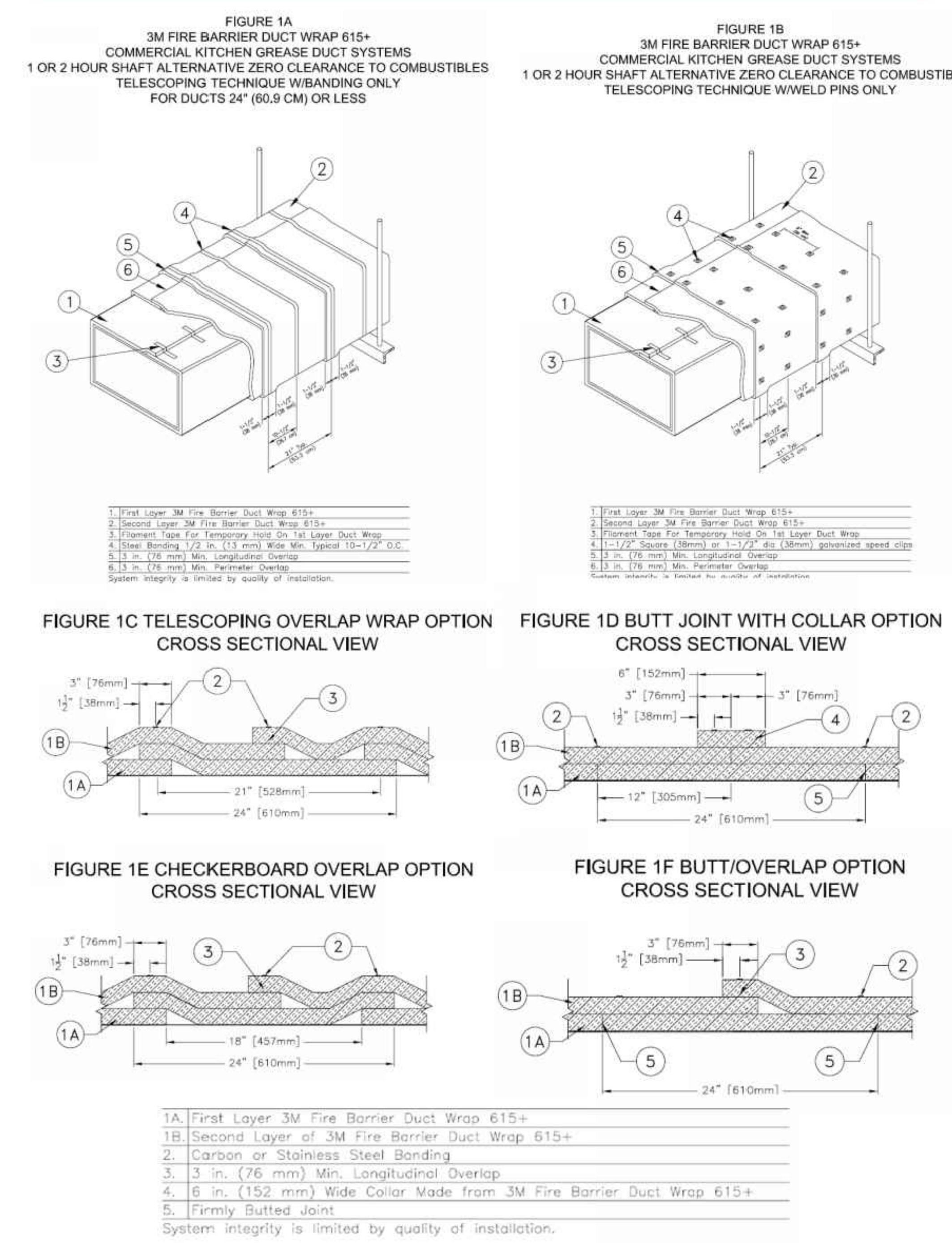

FIGURE 1—TYPICAL APPLICATION OF DUCT WRAP

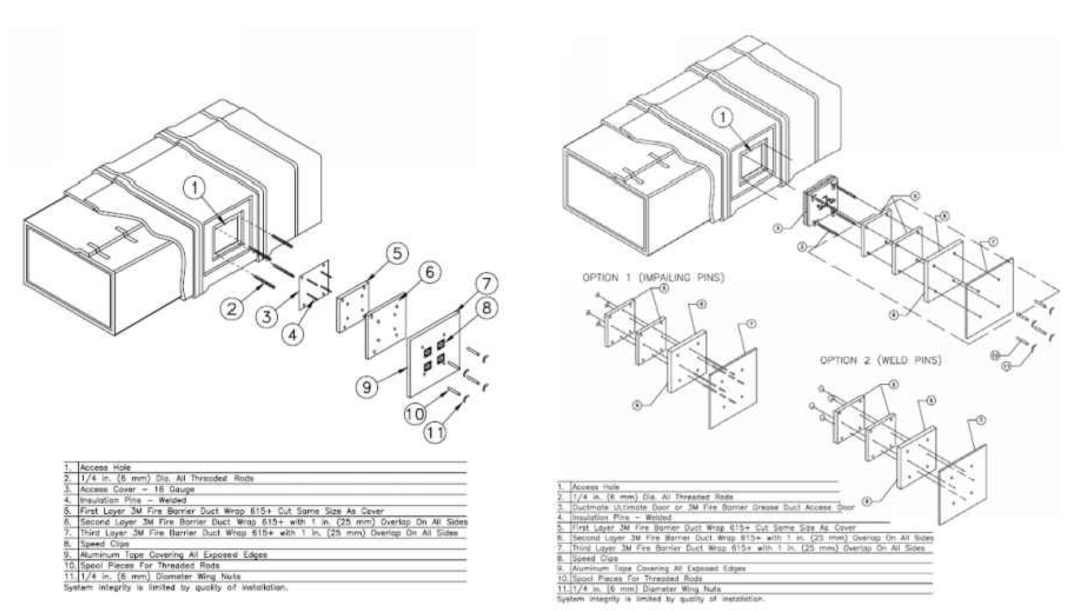

FIGURE 2—3M FIRE BARRIER DUCT WRAP 615+ COMMERCIAL KITCHEN GREASE DUCT SYSTEMS, 1- OR 2-HOUR, ACCESS DOOR SYSTEM

FIGURE 3—3M FIRE BARRIER OR DUCTMATE ULTIMATE GREASE DUCT ACCESS DOOR

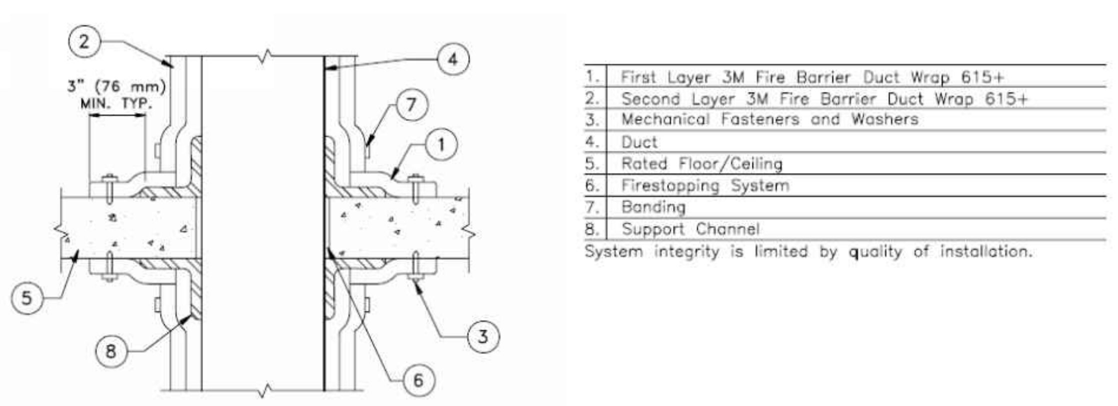

FIGURE 4—3M FIRE BARRIER DUCT WRAP 615+ COMMERCIAL KITCHEN GREASE DUCT SYSTEMS, 1- OR 2-HOUR, VERTICAL SUPPORT

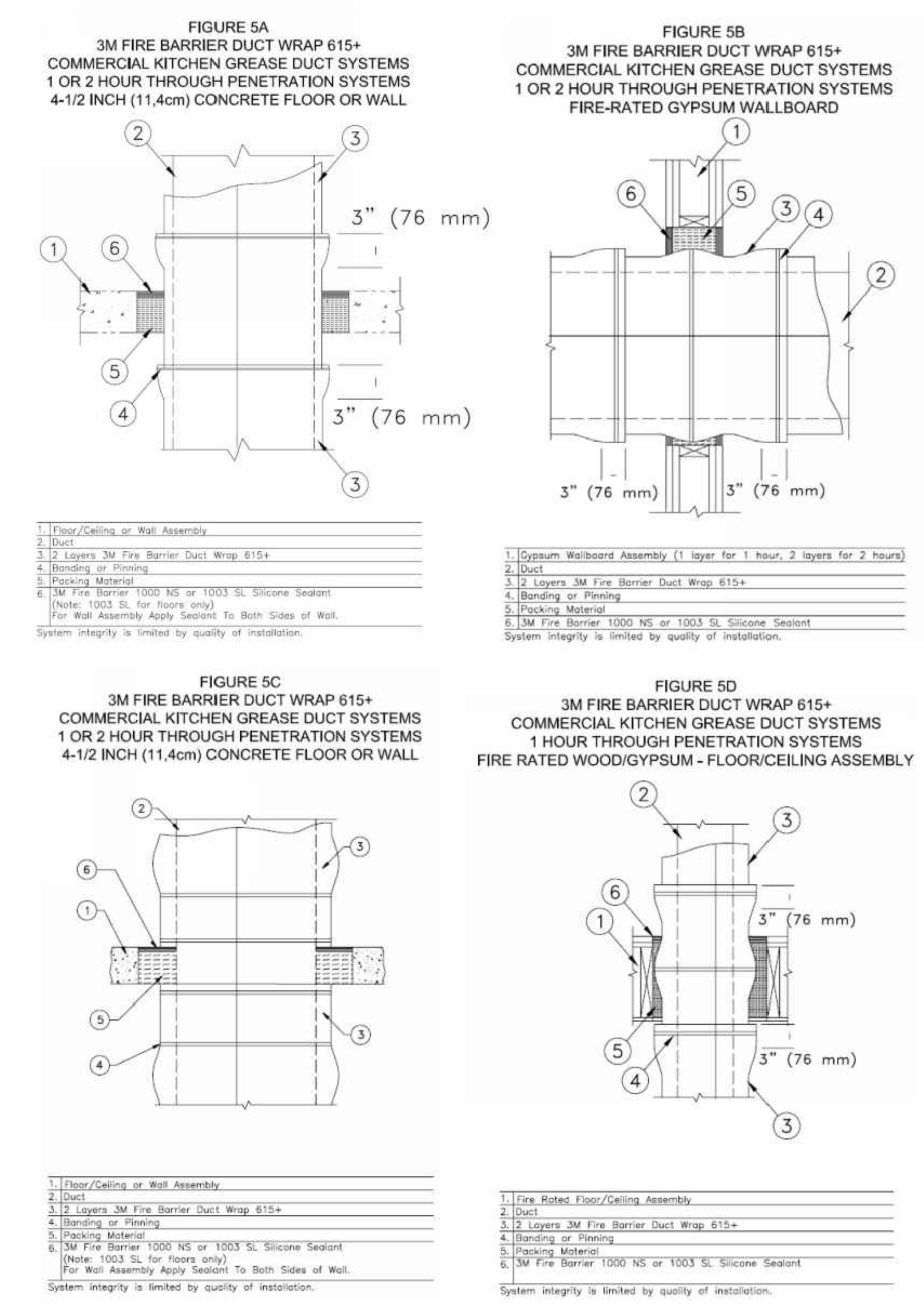

FIGURE 5—THROUGH-PENETRATION FIRE-STOPS

ICC EVALUATION SERVICE | Most Widely Accepted and Trusted

ICC-ES Evaluation Report

ESR-1255 CBC and CMC Supplement

Issued July 2019
This report is subject to renewal May 2020.

www.icc-es.org | (800) 423-6587 | (562) 699-0543 *A Subsidiary of the International Code Council®*

DIVISION: 07 00 00—THERMAL AND MOISTURE PROTECTION
Section: 07 81 33—Mineral-Fiber Fireproofing

REPORT HOLDER:

3M FIRE PROTECTION PRODUCTS

EVALUATION SUBJECT:

3M FIRE BARRIER DUCT WRAP 615+ BLANKET FOR GREASE DUCT ENCLOSURE ASSEMBLIES

1.0 REPORT PURPOSE AND SCOPE

Purpose:

The purpose of this evaluation report supplement is to indicate that 3M Fire Barrier Duct Wrap 615+ Blanket, recognized in ICC-ES master evaluation report ESR-1255, has also been evaluated for compliance with of the code(s) noted below.

Applicable code edition*(s)*:

- 2016 *California Building Code* (CBC)

For evaluation of applicable chapters adopted by the California Office of Statewide Health Planning and Development (OSHPD) and Division of State Architect (DSA), see Sections 2.1.1 and 2.1.2 below.

- 2016 *California Mechanical Code* (CMC)

For evaluation of applicable chapters adopted by the California Office of Statewide Health Planning and Development (OSHPD) and Division of State Architect (DSA), see Sections 2.2.1 and 2.2.2 below.

2.0 CONCLUSIONS

2.1 CBC:

The 3M Fire Barrier Duct Wrap 615+ Blanket for Grease Duct Enclosure Assemblies, described in Sections 2.0 through 7.0 of the master evaluation report ESR-1255, are zero-clearance, fire-resistance-rated grease duct enclosure assemblies serving Type I kitchen hoods, that comply with CBC Sections 712.1.6, 714.3.1.2 and 714.4.1.2, provided the design and installation are in accordance with the 2015 *International Building Code®* (IBC) provisions noted in the master report and the additional requirements of CBC Chapter 7, as applicable.

2.1.1 OHSPD: The 3M Fire Barrier Duct Wrap 615+ Blanket for Grease Duct Enclosure Assemblies, described in Sections 2.0 through 7.0 of the master evaluation report ESR-1255, comply with CBC adopted Sections 712.1.6, 714.3.1.2 and 714.4.1.2 [OSPHD 1, 2 & 4] provided the design and installation are in accordance with the 2015 *International Building Code®* (IBC) provisions noted in the master report and the additional requirements of CBC Chapter 7, as applicable.

2.1.2 DSA: The 3M Fire Barrier Duct Wrap 615+ Blanket for Grease Duct Enclosure Assemblies, described in Sections 2.0 through 7.0 of the master evaluation report ESR-1255, comply with CBC adopted Sections 712.1.6, 714.3.1.2 and 714.4.1.2 [DSA-SS & DSA-SS/CC] provided the design and installation are in accordance with the 2015 *International Building Code®* (IBC) provisions noted in the master report and the additional requirements of CBC Chapter 7, as applicable.

2.2 CMC:

The 3M Fire Barrier Duct Wrap 615+ Blanket for Grease Duct Enclosure Assemblies, described in Sections 2.0 through 7.0 of the master evaluation report ESR-1255, are zero-clearance, fire-resistance-rated grease duct enclosure assemblies serving Type I kitchen hoods, that comply with CMC Sections 507.3.5 and 507.3.6 and the Exception to CMC Section 510.7.3, provided the design and installation are in accordance with the 2015 IAPMO *Uniform Mechanical Code®* (IAPMO UMC) provisions noted in the master report.

ICC-ES Evaluation Reports are not to be construed as representing aesthetics or any other attributes not specifically addressed, nor are they to be construed as an endorsement of the subject of the report or a recommendation for its use. There is no warranty by ICC Evaluation Service, LLC, express or implied, as to any finding or other matter in this report, or as to any product covered by the report.

Copyright © 2019 ICC Evaluation Service, LLC. All rights reserved.

REVISIONS

#	DATE	DESCRIPTION

TURPIN & RATTAN ENGINEERING, INC.
CONSULTING MECHANICAL ENGINEERS
5888 W. SUNSET RD, SUITE 201
LAS VEGAS, NEVADA 89118
702 / 834 / 3880
TREI # 20337

GENERAL CONTRACTOR:
RED MESA BUILDERS
NEVADA CONTRACTORS B#81273
OFFICE: (702) 434-0046 FAX: (702) 434-0051
joe@redmesabuilders.com
4023 W. OQUENDO RD. STE B
LAS VEGAS NV 89118

PROJECT:
T. I. FOR DAIRY QUEEN AT
7955 BLUE DIAMOND ROAD, LAS VEGAS, NEVADA

SHEET TITLE:
GREASE WRAP SPECIFICATIONS – MECHANICAL

DESIGN CORE
ARCHITECTURE – PLANNING – INTERIORS
JIM BERENDJI, ARCHITECT, A.I.A.
P. O. BOX 778425, HENDERSON, NV 89077
PHONE: (702) 731-0293 berendji@embarqmail.com

PROFESSIONAL ENGINEER – STATE OF NEVADA
RADE KECMAN
Exp. 6/30/21
MECHANICAL
No. 10001

DATE: 10-2-20
SCALE: AS NOTED
JOB #: 201001

M-0.2

FILE: C:\PROJECTS\JOE-RED-MESA\DAIRYQEEN-BLUDIAMOND\A-1.1.DWG DATE: 26 OCT 2020 TIME: 11:02 AM

KEYNOTES

1. NEW CEILING MOUNTED EXHAUST FAN. ROUTE VENTING TO ROOF. ENSURE ALL EXHAUST OUTLETS ARE AT LEAST 10'-0" AWAY FROM ANY FRESH AIR INTAKES.
2. 16"ø GREASE DUCT DOWN TO KITCHEN HOOD AND UP THRU ROOF TO KEF-1.
3. 6"ø EXHAUST DUCT UP THRU ROOF. TERMINATE WITH APPROVED ROOF CAP. KEEP TERMINATION A MINIMUM OF 10' FROM ANY FRESH AIR INTAKES.
4. 14"ø (365 CFM) MAKE UP AIR DUCT DOWN TO KITCHEN HOOD. TRANSITION AS REQUIRED.
5. 8"ø (121 CFM) SUPPLY AIR DUCT DOWN TO KITCHEN HOOD. TRANSITION AS REQUIRED.
6. CONNECT DUCT SYSTEMS TO PLENUM DROP FROM NEW ROOF TOP PACKAGE UNIT (ON ROOF) IN THIS LOCATION.
7. PROVIDE 5"ø CONCENTRIC VENT DOWN TO TANKLESS WATER HEATER AND TERMINATE WITH AN APPROVED CONCENTRIC CAP.

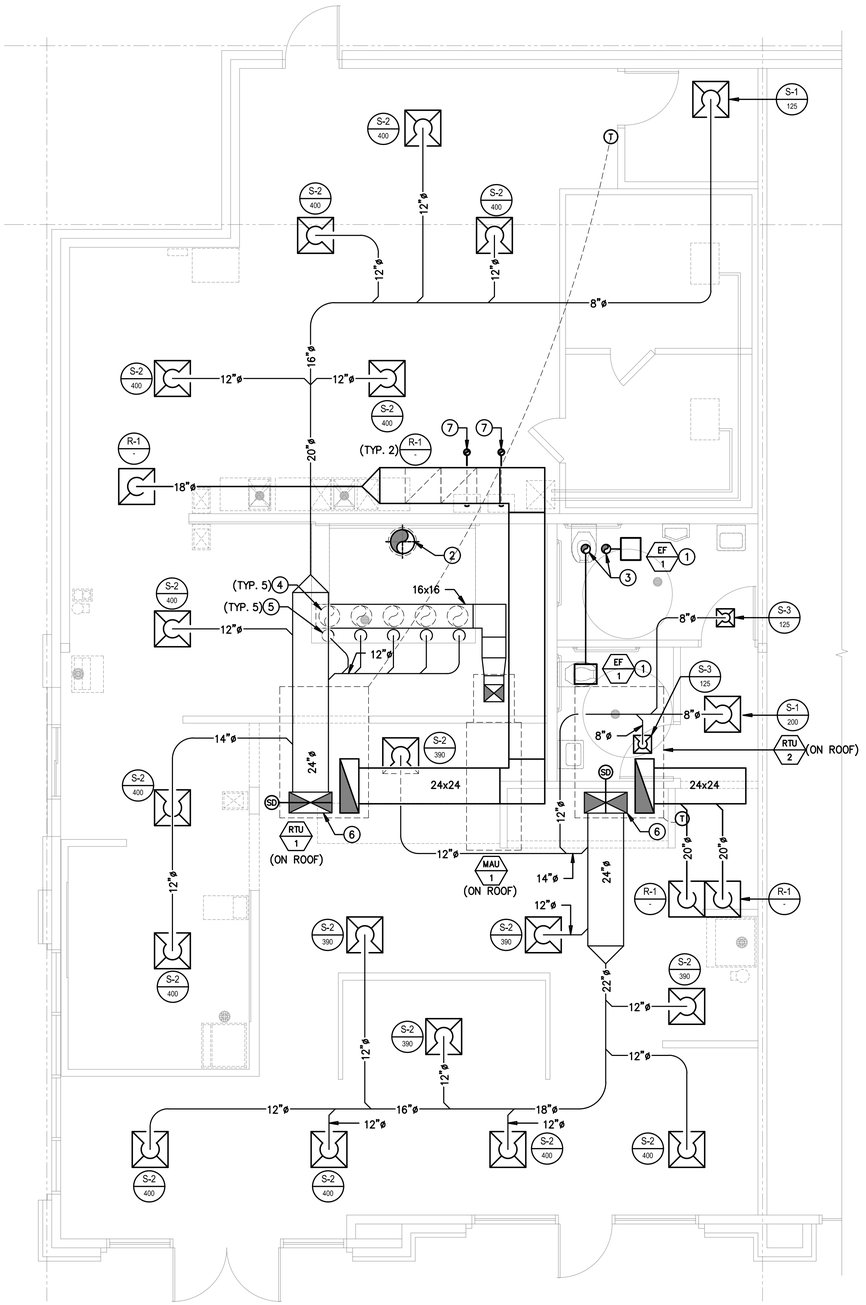

1 M-2.1 FLOOR PLAN – MECHANICAL
1/4"=1'-0"

NORTH

PROFESSIONAL ENGINEER – STATE OF NEVADA
RADE KEECMAN
ISSUED
MECHANICAL
NO. 10001

REVISIONS		
#	DATE	DESCRIPTION

TURPIN & RATTAN
ENGINEERING, INC.
CONSULTING MECHANICAL ENGINEERS
8880 W. SUNSET RD. SUITE 251
LAS VEGAS, NEVADA 89118
(702) 914-1300
TREI # 20337

GENERAL CONTRACTOR:
RED MESA BUILDERS
NEVADA CONTRACTORS B#81273
OFFICE: (702) 434-0046 FAX: (702) 434-0051
joe@redmesabuilders.com
4023 W. QUENDO RD. STE B
LAS VEGAS NV 89118

PROJECT:
T. I. FOR DAIRY QUEEN AT
7955 BLUE DIAMOND ROAD, LAS VEGAS, NEVADA

SHEET TITLE:
FLOOR PLAN – MECHANICAL

DESIGN CORE
ARCHITECTURE – PLANNING – INTERIORS
JIM BERENDJI, ARCHITECT, A.I.A.
P. O. BOX 778425, HENDERSON, NV 89077
PHONE: (702) 731-0293 berendji@embarqmail.com

DATE: 10-2-20
SCALE: AS NOTED
JOB #: 201001

M-2.1

FILE: C:\PROJECTS\JOE-RED-MESA\DAIRYQUEEN-BLUEDIAMOND\A-2.1.DWG DATE: 25 OCT 2020 TIME: 4:54 PM

KEYNOTES

1. TERMINATE EXHAUST DUCT WITH AN APPROVED ROOF CAP.
2. EXHAUST OUTLET SHOULD BE TERMINATED A MINIMUM OF 10' FROM ANY FRESH AIR INTAKES.

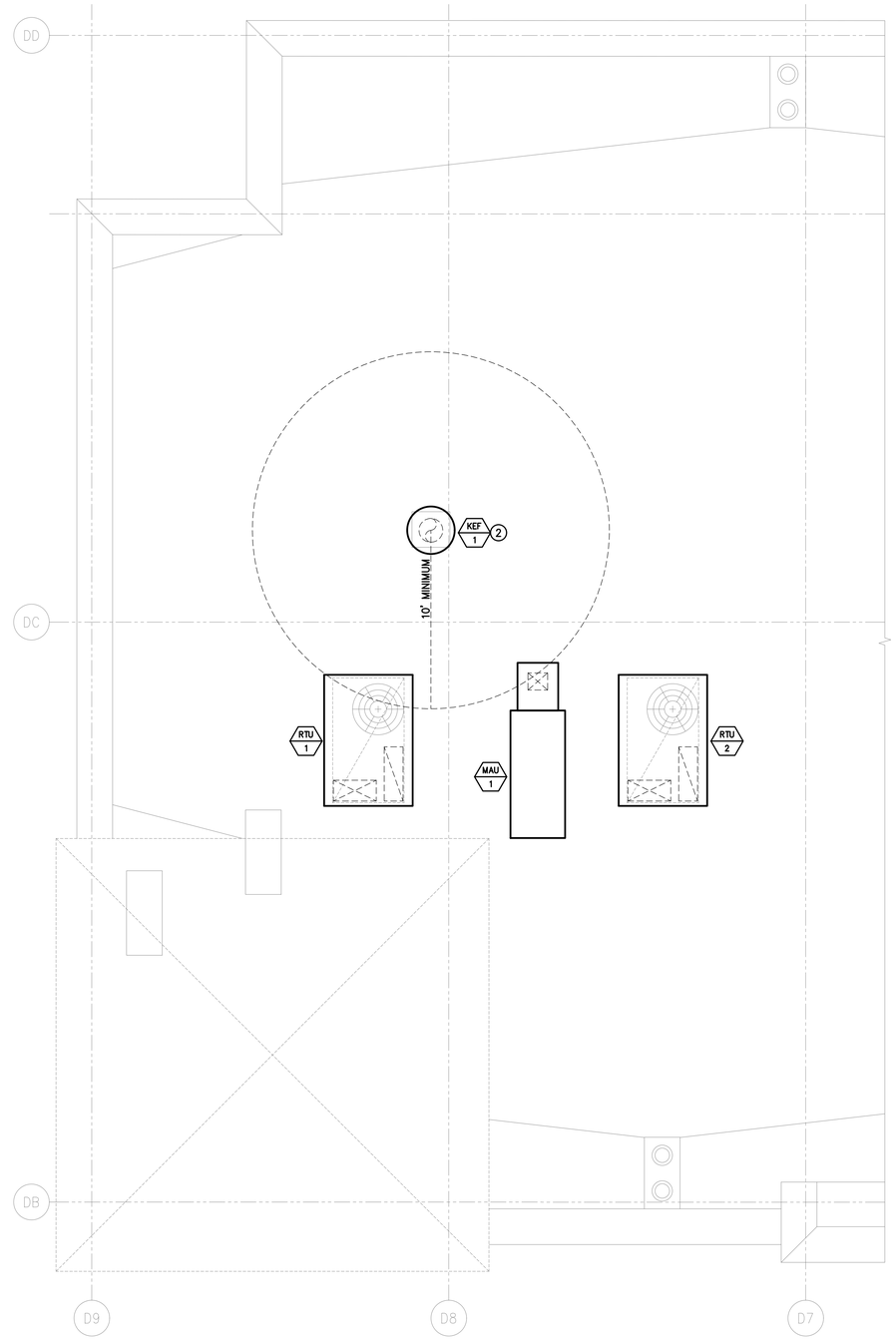

1 / M-3.2 PARTIAL ROOF PLAN – MECHANICAL
1/4"=1'-0"

NORTH

PROFESSIONAL ENGINEER – STATE OF NEVADA
RADE KECMAN
Exp. 6/30/21
MECHANICAL
No. 10001

#	DATE	DESCRIPTION

REVISIONS

TURPIN & RATTAN
CONSULTING MECHANICAL ENGINEERS
8345 W. SUNSET RD. SUITE 251
LAS VEGAS, NEVADA 89118
(702) 362-7800
TRE: # 20337

GENERAL CONTRACTOR:
RED MESA BUILDERS
NEVADA CONTRACTORS B#81273
OFFICE: (702) 434-0046 FAX: (702) 434-0051
joe@redmesabuilders.com
4023 W. QUEENDO RD. STE B
LAS VEGAS NV 89118

PROJECT:
T. I. FOR DAIRY QUEEN AT
7955 BLUE DIAMOND ROAD, LAS VEGAS, NEVADA

SHEET TITLE:
PARTIAL ROOF PLAN – MECHANICAL

DESIGN CORE
ARCHITECTURE – PLANNING – INTERIORS
JIM BERENDJI, ARCHITECT, A.I.A.
P. O. BOX 778425, HENDERSON, NV 89077
PHONE: (702) 731-0293 berendji@embarqmail.com

DATE: 10-2-20
SCALE: AS NOTED
JOB #: 201001

M-3.2

FILE: C:\PROJECTS_JOB-RED-MESA\DAIRYQUEEN-BLUEDIAMOND\A-3.2.DWG DATE: 23 OCT 2020 TIME: 9:32 PM

ELECTRICAL GENERAL NOTES

1. THE DRAWINGS REPRESENT THE GENERAL ARRANGEMENT AND LOCATIONS OF THE ELECTRICAL WORK. DATA PRESENTED ON THESE DRAWINGS ARE AS ACCURATE AS PLANNING CAN DETERMINE, BUT FIELD VERIFICATION OF ALL DIMENSIONS, LOCATIONS, LEVELS, ETC., TO SUIT FIELD CONDITIONS IS REQUIRED.

2. REVIEW ALL ARCHITECTURAL, STRUCTURAL, AND MECHANICAL DRAWINGS AND ADJUST ALL WORK TO MEET THE REQUIREMENTS OF CONDITIONS SHOWN. THE ARCHITECTURAL DRAWINGS SHALL TAKE PRECEDENCE OVER ALL OTHER DRAWINGS. DISCREPANCIES BETWEEN DIFFERENT PLANS, OR BETWEEN DRAWINGS AND OR REGULATIONS AND CODES GOVERNING THE INSTALLATION SHALL BE BROUGHT TO THE ATTENTION OF THE ENGINEER IN WRITING BEFORE THE DATE OF BID OPENING. IF DISCREPANCIES ARE NOT REPORTED, THE CONTRACTOR SHALL BID THE GREATER QUANTITY OR BETTER QUALITY, AND APPROPRIATE ADJUSTMENTS WILL BE MADE AFTER CONTRACT AWARD.

3. THE DRAWINGS DO NOT INDICATE THE ACTUAL METHOD OF CONSTRUCTION. THE CONTRACTOR SHALL BE SOLELY RESPONSIBLE FOR SUPERVISING AND DIRECTING ALL CONSTRUCTION WORK, MEANS, METHODS, TECHNIQUES, AND SEQUENCES.

4. ALL EXISTING JOB SITE CONDITIONS, DIMENSIONS, AND SERVICE REQUIREMENTS SHALL BE VERIFIED BY THE CONTRACTOR BEFORE START OF CONSTRUCTION AND/OR FABRICATION OF MATERIALS. ANY DISCREPANCIES ENCOUNTERED SHALL BE IMMEDIATELY BROUGHT TO THE ATTENTION OF THE ENGINEER OF RECORD FOR CLARIFICATION.

5. CONTRACTOR TO ADJUST LOCATIONS OF WALL OUTLETS BOXES SHOWN ON DRAWINGS FOR RECEPTACLES, SWITCHES, AND FIRE ALARM DEVICES, ETC. TO ACCOMODATE FURNITURE, SHELVING AND STACKING AS SHOWN ON THE ARCHITECTURAL DRAWINGS. IN ALL CASES, SWITCHES CONTROLLING LIGHTING ARE TO BE LOCATED ON THE STRIKE SIDE OF DOORS. LOCATION INDICATED FOR SWITCHES AND OUTLETS ARE APPROXIMATE. OWNER MAY MAKE MINOR RELOCATIONS AT NO ADDITIONAL CHARGE.

6. CONTRACTOR SHALL COORDINATE WITH ALL TRADES AND WORKMEN THE CLOSURE, PATCH, REPAIR OR REPLACEMENT OF ALL OPENINGS WHERE ITEMS HAVE BEEN REMOVED OR OPENED AS REQUIRED TO COMPLETE NEW WORK.

7. ALL WORK SHALL BE IN ACCORDANCE WITH THE 2017 EDITION OF THE NATIONAL ELECTRICAL CODE (NEC), GOVERNMENT LAWS, ORDINANCES, RULES AND REGULATIONS, AMENDMENTS ADOPTED BY THE LOCAL AUTHORITY, FEDERAL, STATE, AND LOCAL CODES HAVING JURISDICTION, AND LOCAL FIRE MARSHALL. IN THE EVENT OF CONFLICT BETWEEN THE ABOVE AUTHORITIES AND THESE CONSTRUCTION DOCUMENTS, THE MOST RESTRICTIVE SHALL GOVERN.

8. ALL WORK SHALL BE DONE IN THE BEST POSSIBLE MANNER AND WORKMANSHIP BASE ON STANDARD CONSTRUCTION PRACTICES.

9. CONTRACTOR SHALL INCLUDE IN THEIR BID ALL WORK REQUIRED TO CONNECT TO ALL SERVICE UTILITIES. CONTRACTOR SHALL VERIFY LOCATION AND INSTALLATION SHALL CONFORM TO ALL SPECIFICATIONS REQUIRED BY LOCAL UTILITIES.

10. ELECTRICAL CONTRACTOR TO FURNISH AND INSTALL A COMPLETELY WIRED AND OPERATIONAL ELECTRICAL SYSTEM AND PROVIDE ALL NECESSARY FINAL CONNECTIONS TO ALL EQUIPMENT.

11. CONDUIT ROUTING SHOWN ON DRAWINGS ARE DIAGRAMMATIC ONLY. EXACT ROUTING OF CONDUIT SHALL BE DETERMINED BY THE CONTRACTOR, ANY ADDITIONAL COST REQUIRED BY THE ROUTING OF ADDITIONAL CONDUITS SHALL BE INCURRED BY THE ELECTRICAL CONTRACTOR.

12. ALL EQUIPMENT AND MATERIALS FURNISHED, DELIVERED, AND INSTALLED SHALL BE NEW, IN PERFECT CONDITION, IN UNOPENED MANUFACTURER'S ORIGINAL CONTAINERS, AND OF THE HIGHEST QUALITY. STANDARD PRODUCTS SHALL BE FROM MANUFACTURERS REGULARLY ENGAGED IN THE PRODUCTION OF SUCH EQUIPMENT AND MATERIALS, AND SHALL BE OF THE LATEST STANDARD DESIGN. MATERIAL AND EQUIPMENT SHALL BEAR APPROVAL BY U.L. LISTING AND OTHER APPROPRIATE AGENCIES.

13. CONTRACTOR IS RESPONSIBLE FOR MAINTAINING THE INTEGRITY OF ALL FIRE–RATED WALLS, CEILING AND ROOF ASSEMBLIES PENETRATED. ALL CORING, CUTTING, PATCHING, AND REFINISHING OF WALLS, SURFACES AND OPENINGS PENETRATED OR AFFECTED BY HIS INSTALLATION SHALL BE SEALED WITH U.L. LISTED SEALANT AT ALL PENETRATIONS. FURNISH AND INSTALL APPROVED EXPANSION FITTING WHERE RACEWAY CROSSES AN EXPANSION JOINT. HOWEVER, NO CUTTING AND/OR PENETRATION OF WORK OF OTHER TRADES OR OF ANY STRUCTURAL MEMBER SHALL BE DONE WITHOUT THE CONSENT OF THE ARCHITECT.

14. ELECTRICAL CONTRACTOR SHALL PROVIDE TEMPORARY POWER AND ADEQUATE LIGHTING AS REQUIRED.

15. SEE MECHANICAL AND PLUMBING DRAWINGS AND SPECIFICATIONS FOR ADDITIONAL CONNECTION REQUIREMENTS TO CONTROL PANELS, CONTROL TRANSFORMERS, TIME CLOCKS, VALVES, T–STAT RELAYS AND DUCT SMOKE DETECTORS. PROVIDE ALL CONDUIT AND WIRING.

16. ALL PAINTING OF LIGHT FIXTURES, WHERE SPECIFIED, SHALL BE DONE IN A NEAT AND WORKMANLIKE MANNER. SURFACES SHALL BE EVENLY COVERED WITH NO SAGS, DRIPS, OR SCRATCHES. DO NOT PAINT LENSES, BAFFLES, REFLECTORS, OR CHROME PARTS. DISASSEMBLE FIXTURES PRIOR TO PAINTING AND CLEAN PORTIONS TO BE PAINTED. PAINT SHALL BE SEMI– GLOSS ENAMEL. ALL PAINTING COLORS SHALL BE APPROVED BY ARCHITECT.

17. PROVIDE SUFFICIENT GUTTER SPACES AS REQUIRED FOR PANELBOARDS, DISCONNECT SWITCHES, AND LUGS ETC. TO ACCOMMODATE CONDUCTORS ENTERING THE BOX. ALL GUTTER SHALL MEET U.L. LISTING REQUIREMENTS AND BE SIZED PER NATIONAL ELECTRICAL CODE (NEC).

18. FURNISH AN APPROVED EXPANSION FITTING WHERE RACEWAY CROSSES AN EXPANSION JOINT.

19. CONTRACTOR SHALL PROVIDE PULL BOXES EVERY ONE HUNDRED FEET (100') TO EASE TENSION ON WIRE AND ALLOW FOR PROPER INSTALLATION OF CONDUCTORS.

20. FURNISH AND INSTALL PULL WIRE IN ALL EMPTY CONDUITS AND AUXILIARY SYSTEMS, TELEPHONE, SECURITY, FIRE ALARM SYSTEMS, DATA, AND TELEVISION, ETC. VERIFY PULL WIRE REQUIREMENTS WITH OTHER SYSTEM VENDORS. CAP ALL EXPOSED CONDUIT ENDS.

21. ALL EXTERIOR ELECTRICAL DEVICES AND EQUIPMENT EXPOSED TO THE OUTSIDE ENVIRONMENT SHALL BE WEATHERPROOF TYPE, NEMA 3R.

22. WHERE MORE THEN ONE LIGHT SWITCH IS TO BE MOUNTED AT ONE LOCATION, MOUNT LIGHT SWITCHES IN A MULTIPLE GANG OUTLET BOX WITH A SINGLE COVER PLATE.

23. WHERE DISCONNECT SWITCHES ARE UNABLE TO BE MOUNTED DIRECTLY TO THE EQUIPMENT, THE CONTRACTOR SHALL PROVIDE AN APPROVED STRUCTURAL SOUND INDIVIDUAL MOUNTING SUPPORT. NO MODIFICATION SHALL BE DONE THAT WILL COMPRISE THE U.L. LISTING OR MANUFACTURER'S REQUIREMENTS OF THE EQUIPMENT.

24. ALL ELECTRICAL POWER, LIGHTING, TELEPHONE AND OR SIGNAL WIRING INSTALLED THAT PENETRATES FIRE–RATED WALLS OR ENCLOSURES SHALL BE IN METALLIC CONDUIT. CONTRACTOR SHALL BE RESPONSIBLE FOR MAINTAINING THE INTEGRITY OF ALL FIRE–RATED PENETRATIONS AFFECTED AND PROVIDE U.L. LISTED INTIUVESCENT SEALANT AT ALL PENETRATIONS.

25. CONTRACTOR RESPONSIBLE FOR PAYING ALL PERMITS AND APPLICABLE FEES RELATIVE TO THE CONSTRUCTION OF THIS PROJECT.

26. MECHANICAL SPLIT SYSTEM HVAC UNITS INSTALLED IN ENCLOSED AREAS, CONTRACTOR TO PROVIDE AN APPROVED LAMP RECEPTACLE, A LIGHT SWITCH NEAREST TO ENCLOSURE OPENING AND A RECEPTACLE OUTLET NEXT TO FAN COIL UNIT AND CONNECT TO NEAREST RECEPTACLE CIRCUIT. PROVIDE NECESSARY CONTROLS, CONTACTORS, AND OVERCURRENT PROTECTION TO FAN COIL PER MANUFACTURERS RECOMMENDATIONS.

27. CONTRACTOR TO VERIFY WITH ARCHITECT WALL DEPTH OF ALL WALLS CONTAINING FLUSH MOUNTED PANELBOARDS, INFORM ARCHITECT TO PROVIDE A MINIMUM OF SIX INCHES (6") WALL TO ACCOMMODATE PANELS. ELECTRICAL CONTRACTOR TO FURNISH AND INSTALL AN ADDITIONAL SIX (6) 1" SPARE CONDUITS STUBBED ABOVE CEILING FROM EACH ELECTRICAL PANELBOARD.

28. ELECTRICAL CONTRACTOR IS RESPONSIBLE FOR SIZING ALL CONDUIT PER NATIONAL ELECTRICAL CODE (NEC), WHERE DRAWINGS SHOW ONLY CONDUCTOR SIZE AND QUANTITY.

29. CONTRACTOR TO VERIFY WITH ARCHITECTURAL REFLECTED CEILING PLANS AND DETERMINE EXACT LOCATION OF LIGHT FIXTURES PRIOR TO FRAMING. CONTRACTOR SHALL VERIFY WEIGHT OF ALL LIGHT FIXTURES AND PROVIDE THE NECESSARY ADDITIONAL SUPPORT, FRAMING, AND EARTH QUAKE WIRES AS REQUIRED PER LOCAL AUTHORITIES HAVING JURISDICTION.

30. CONTRACTOR SHALL MAINTAIN GROUND CONTINUITY TO EVERY OUTLET PER N.E.C., TABLE 250–122. PROVIDE A GREEN CONDUCTOR (NOT INDICATED) IN EACH RACEWAY. SIZE OF GROUNDING CONDUCTOR PER NEC ART 250.

31. ALL WIRES AND CABLES SHALL BE COPPER, 600 VOLT, #12 AWG MINIMUM. EXCEPT CONTROL WIRING WHICH SHALL BE #18 THWN. CONDUCTORS #10 AWG AND SMALLER SHALL BE SOLID. CONDUCTOR #8 AWG AND LARGER SHALL BE STRANDED. TYPE OF INSUALTION AS NOTED ON DRAWINGS AND AS FOLLOWS:
   - THHN/THWN–2 INSULATION FOR ALL BRANCH CIRCUIT WIRING & CONTROL CIRCUIT WIRING.
   - XHHW–2 USED FOR ALL PANEL FEEDERS AND SERVICE CONDUCTORS.
   - THHN/THWN–2 INSULATION TYPE SHALL BE USED WHERE CONDUCTORS ARE INSTALLED IN CONDUITS EXPOSED TO THE WEATHER.

32. ALL UNDERGROUND CONDUITS SHALL BE PVC OR PVC RGS. IN A TRANSIONAL RISER, ALL PARTS OF THE CONDUIT SYSTEM THAT IS BELOW GRADE SHALL BE RGS WRAP WITH 10 MIL TAPE UP TO 6" ABOVE GRADE.

33. CONTRACTOR TO PROVIDE AN ARC FLASH STUDY IF REQUIRED BY THE AHJ. INSTALL PANEL WITH ARC FLASH WARNING LABEL AS REQUIRED BY THE CODE.

34. ALL CIRCUITS PROTECTED BY GROUND FAULT AND/OR ARC FAULT BREAKER SHALL BE PROVIDED WITH INDIVIDUAL NEUTRAL

35. REFER TO KITCHEN EQUIPMENT CONSULTANT DRAWINGS FOR ADDITIONAL ELECTRICAL WORK NOT SHOWN ON POWER PLAN SHEET, BUT INCLUDED IN THE ELECTRICAL CONTRACT SUCH AS:
   A. CONDUIT, WIRE JUNCTION BOXES AND RECEPTACLES LOCATED IN SERVICE AND COOLING AREA COUNTERS, CONNECTIONS TO K.E.C. FURNISHED LIGHTS, SWITCHES, BALLASTS, JUNCTION BOXES, ETC. B. CORDS, CAPS AND RECEPTACLES, OR MISCELLANEOUS KITCHEN EQUIPMENT.
   B. DIMENSION AND HEIGHT OF POWER AND DATA RECEPTACLES

36. REFER TO KITCHEN DRAWINGS FOR PVC SLEEVES AND PULL BOXES TO BE FURNISHED AND INSTALLED BY THE ELECTRICAL CONTRACTOR FOR REFRIGERATION AND DRINK DISPENSING LINES. ELECTRICAL CONTRACTOR SHALL COMPLY WITH ALL DETAILS AND INSTALLATION INSTRUCTIONS.

37. DEVICE PLATES IN NON–PUBLIC AREAS, INCLUDING SERVICE AREAS SHALL BE STAINLESS STEEL. DEVICE PLATES IN PUBLIC AREAS SHALL BE BROWN OR IVORY PLASTIC OR AS REQUIRED TO MATCH WALL. ENGRAVE PLATES WHERE INDICATED. ENGRAVING SHALL BE 1/8" HIGH BLACK FILLED AND SHALL BE DONE BY PLATE MANUFACTURER.

ELECTRICAL SYMBOLS

PLANS SYMBOLS

- JUNCTION BOX
- FUTURE EQUIPMENT
- CONDUIT UNDER SLAB OR EARTH
- CONDUIT CONCEALED IN WALLS
- A–# CONDUIT HOMERUN (LETTER(S) = PANELBOARD, # = CIRCUIT)

- DUPLEX GROUNDING TYPE RECEPTACLE +18" AFF COD UNO
  RECEPTACLE SUBSCRIPT LETTER TO INDICATE ITS' FUNCTION:
  C = ABOVE COUNTER HEIGHT
  D = DEDICATED CIRCUIT
  H = MOUNTED HORIZONTAL
  WP = WEATHERPROOF WHEN IN USE
  IG = ISOLATED GROUND. PROVIDE ISOLATED GROUND WIRE
  U = RECEPTACLE WITH 2 USB PORTS
- GROUND FAULT PROTECTED RECEPTACLE
- DOUBLE DUPLEX, 2 DUPLEXES GROUNDING TYPE RECEPTACLE +18" AFF COD UNO
- DUPLEX GROUNDING TYPE RECEPTACLE SPLIT WIRED +18" AFF COD UNO
- SINGLE GROUNDING TYPE RECEPTACLE. VERIFY TYPE +18" AFF COD UNO, 120V OR 208V, 1 PH
- CLOCK RECEPTACLE +72" AFF TOB UNO
- DUPLEX RECEPTACLE MOUNTED ON CEILING.
- DUPLEX RECEPTACLE MOUNTED ON FLOOR.
- SINGLE RECEPTACLE MOUNTED ON FLOOR. VERIFY NEMA CONFIGURATION
- 3 PHASE OUTLET, TYPE TO MATCH EQUIPMENT PLUG
- MOTOR OR EXHAUST FAN
- PUSHBUTTON
- PC PHOTOCELL
- TC TIMECLOCK
- DISCONNECT SWITCH
- COMBINATION MOTOR STARTER
- FUSED DISCONNECT SWITCH
- MAIN SWITCHBOARD OR DISTRIBUTION PANEL
- A ELECTRICAL PANELBOARD SURFACE MOUNTED
- A ELECTRICAL PANELBOARD FLUSH MOUNTED
- LCC LIGHTING CONTROL CABINET
- M METER
- T THERMOSTAT FURNISHED BY MECHANICAL, INSTALLED BY ELECTRICAL CONTRACTOR

NOTES: CONTRACTOR TO COORDINATE MOUNTING HEIGHT WITH THE ARCHITECTURAL DRAWING. ADJUST AS REQUIRED TO AVOID BACK SPLASH, MIRROR, ETC.

ONLY THE NUMBER AND SIZE OF CONDUITS ARE SHOWN ON PLANS. CONTRACTOR TO BE RESPONSIBLE FOR SIZING CONDUIT PER NEC

- AC 1 MECHANICAL EQUIPMENT
  LEGEND:
  AC = AIR CONDITIONER
  CP = CIRCULATION PUMP
  CU = COOLING UNIT/COMPRESSOR UNIT
  EF = EXHAUST FAN
  FC = FAN COIL
  HP = HEAT PUMP

- S SINGLE POLE SINGLE THROW SWITCH ±48" AFF COD UNO
- S_3 THREE–WAY SWITCH ±48" AFF COD UNO
- S_4 FOUR–WAY SWITCH ±48" AFF COD UNO
- S_D DIMMER SWITCH +48" AFF COD (VERIFY RATING)
- S_a LOWER CASE LETTER DESIGNATES FIXTURE CONTROLLED
- DOOR BELL
- TV OUTLET BOX & FACE PLATE WITH SINGLE–GANG COAXIAL CABLE ADAPTER ±18" AFF TOB UNO (PROVIDE COAX CABLE TO CABLE BOX)
- TELEPHONE TERMINAL BOARD
- TTC TELEPHONE TERMINAL CABINET
- TELEPHONE OUTLET FOR PLUG–IN TYPE MODULAR JACK +18" AFF COD UNO. RUN 3/4"CO TO TTB OR TTC.
- COMBINATION TELEPHONE & COMPUTER OUTLET WITH PLUG–IN TYPE MODULAR JACK +18" AFF COD UNO. RUN 3/4"CO TO CEILING
- FLOOR BOX WITH TELEPHONE OUTLET & COVERPLATE. RUN 3/4"CO TO TTB OR TTC
- COMPUTER OUTLET FOR PLUG–IN TYPE MODULAR JACK +18" AFF COD UNO. RUN 3/4"CO TO SERVER HUB.
- FLOOR BOX WITH COMPUTER OUTLET & COVERPLATE. RUN 3/4"CO TO SERVER HUB
- FLOOR BOX WITH TELEPHONE & COMPUTER OUTLET & COVERPLATE. RUN 3/4"CO TO TTB OR TTC AND 3/4"CO TO SERVER HUB.
- 1 SHEET KEY NOTE

PROVIDE CONDUIT AND BOX AS REQUIRED PER FIRE ALARM SYSTEM DRAWING.

- T TAMPER SWITCH
- F FLOW SWITCH
- DD DUCT DETECTOR
- SD SMOKE DETECTOR
- SC COMBINATION SMOKE AND CARBON MONOXIDE DETECTOR
- FACP FIRE ALARM CONTROL PANEL
- P MANUAL PULL STATION
- HORN STROBE
- H HORN ONLY

ONE–LINE DIAGRAM AND SCHEMATIC SYMBOLS

- SINGLE THROW SWITCH
- FUSE
- C.T.'S (CURRENT TRANSFORMER)
- P.T.'S (POTENTIAL TRANSFORMER)
- CIRCUIT BREAKER
- MOTOR OVERLOADS
- M METER
- A AMMETER
- V VOLTMETER
- R# RELAY
- TD TIME DELAY RELAY
- TRANSFORMER

△	DATE	REVISIONS

AGA & Associates, inc
P.O. BOX 370114
LAS VEGAS, NV. 89137
Tel No. (702) 461-2766
Fax No. (702) 240 6637

DAIRY QUEEN
TENANT IMPROVEMENT

7955 BLUE DIAMOND ROAD
LAS VEGAS, NEVADA

GENERAL NOTES
SYMBOLS

DRAWN	AOA
CHECKED	AOA
DATE	10–26–2020
SCALE	AS SHOWN
JOB NO.	20095
SHEET	E-1

PROFESSIONAL ENGINEER
STATE OF NEVADA
DANIEL ARCHES
Exp. 12-31-20
ELECTRICAL
No.011453

11/22/20

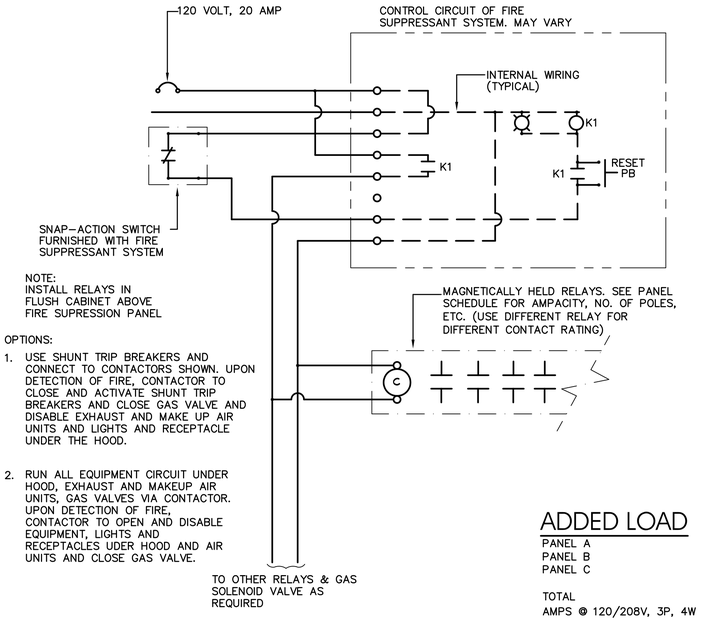

OPTIONS:

1. USE SHUNT TRIP BREAKERS AND CONNECT TO CONTACTORS SHOWN. UPON DETECTION OF FIRE, CONTACTOR TO CLOSE AND ACTIVATE SHUNT TRIP BREAKERS AND CLOSE GAS VALVE AND DISABLE EXHAUST AND MAKE UP AIR UNITS AND LIGHTS AND RECEPTACLE UNDER THE HOOD.

2. RUN ALL EQUIPMENT CIRCUIT UNDER HOOD, EXHAUST AND MAKEUP AIR UNITS, GAS VALVES VIA CONTACTOR. UPON DETECTION OF FIRE, CONTACTOR TO OPEN AND DISABLE EQUIPMENT, LIGHTS AND RECEPTACLES UDER HOOD AND AIR UNITS AND CLOSE GAS VALVE.

HOOD FIRE SYSTEM INTERLOCK DIAG.

NO SCALE

ADDED LOAD

PANEL A
PANEL B
PANEL C

TOTAL
AMPS @ 120/208V, 3P, 4W

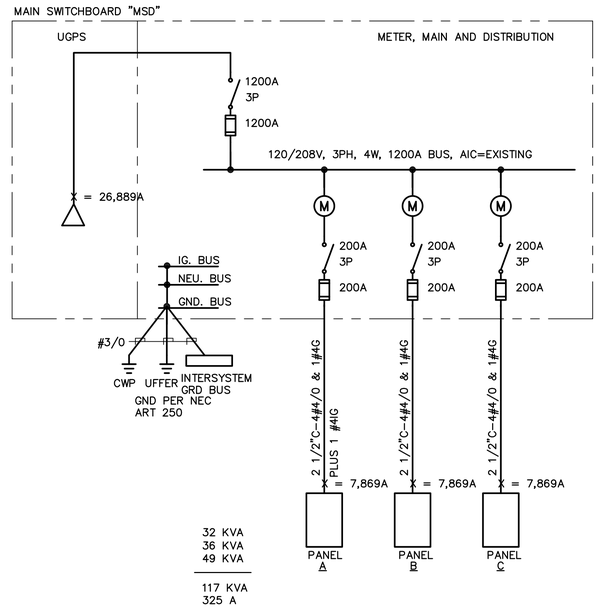

PARTIAL SINGLE LINE DIAGRAM

NTS

PANEL: A

DATE: 11/22/20 TIME: 22:14:57
JOB: X

PANEL VOLTAGE: 208/120 3Φ 4 W
BUS: 200A
MAINS: MLO
AIC RATING: 10,000

CIRCUIT CODE: blank or N : NON-CONTINUOUS
L : LONG-CONTINUOUS
R : DEMANDABLE RECEPTACLES
K : KITCHEN NO. OF EQUIPMENT: 0

CKT NO	CODE	TRIP	POLE	LOAD DESIGNATION DESCRIPTION	(NOTE)	M	R	L	CONNECTED VA ΦA	ΦB	ΦC	ABC	ΦA	ΦB	ΦC	L	R	M	LOAD DESIGNATION (NOTE)	DESCRIPTION	TRIP	POLE	CODE	CKT NO
1		20	1	POS & PTR #1A1 & #1J2					900				1600						(1)	MICROWAVE #5B6	20	/		2
3		20	1	COFFEE MAKER #4C5						1600				1600						–	/	2		4
5		20	1	SPARE							X				500					UC REF #5B3				6
7		20	1	COOKING RECYC #6E					1600				240							HOLDING CABINET #5B1				8
9		20	1	OFFICE CONV RECEP						540				2250					(1)	VENTLESS OVEN #5B2	30	/		10
11		20	1	OFFICE RECEPTACLE							360				2250					–	/	2		12
13		20	1	CARBONATOR #1C3					500				1200							PREP TABLE #5C				14
15		20	1	CONVENIENCE RECEPTS						720				1600					(1)	MICROWAVE #5DC	20	/		16
17		20	1	CONE DIP#4F1 & 4F2							1300				1600					–	/	2		18
19		20	/	SINGLE BLAST FRZ #4E	(1)				800				500							UC REF #5D3				20
21		/	2	–						800				240						HOLDING CABINET #5D1				22
23		20	1	ICE TEA DISPENSER #4C4							500				2250				(1)	VENTLESS OVEN #5B2	30	/		24
25		20	1	CASH REG #4C1					720				2250							–	/	2		26
27		20	1	DRINK HEAD #4D						1500				1300					(1)	BUN TOASTER #5F1	20	/		28
29		20	1	WATER HEATER							960				1300					–	/	2		30
31		20	1	HEATED GRAVY #5N2 & RN3					900				1600						(1)	MICROWAVE #5F3	20	/		32
33		20	1	FRY DUMP #5N1						1100				1600						–	/	2		34
35		20	1	TOP FRZR #5N							700				X					SPARE	20	1		36
37		20	1	DRYER #5K					1000				X							SPARE	20	1		38
39		20	1	FRZ #5J & #5H						1000				X						SPARE	20	1		40
41		20	1	RECEPTACLES							720				X					SPARE	20	1		42

PANEL NOTES:

(1) GFP BREAKERS

PHASE TOTALS ΦA: 7390 ΦB: 15850 ΦC: 7900

TOTAL CONNECTED VA	31140
CONNECTED VA (CODE N)	31140
CONNECTED VA (CODE L)	0
CONNECTED VA (CODE R)	0
CONNECTED VA (CODE K)	0
PANEL CONNECTED KVA	31.1
PANEL DEMAND KVA	31.1
PANEL DEMAND AMPS	86.5
HIGH Φ AMPS W/LCL	132.1

PROVIDE ISOLATED GROUND BUS FOR THIS PANEL
PROVIDE HANDLE TIE TO BREAKERS WHOSE HOMERUN HAVE COMMON NEUTRAL

PANEL: C

DATE: 11/22/20 TIME: 22:15:13
JOB: X

PANEL VOLTAGE: 208/120 3Φ 4 W
BUS: 200A
MAINS: MLO
AIC RATING: 10,000

CIRCUIT CODE: blank or N : NON-CONTINUOUS
L : LONG-CONTINUOUS
R : DEMANDABLE RECEPTACLES
K : KITCHEN NO. OF EQUIPMENT: 0

CKT NO	CODE	TRIP	POLE	LOAD DESIGNATION DESCRIPTION	(NOTE)	M	R	L	CONNECTED VA ΦA	ΦB	ΦC	ABC	ΦA	ΦB	ΦC	L	R	M	LOAD DESIGNATION (NOTE)	DESCRIPTION	TRIP	POLE	CODE	CKT NO
1		20	/	REMOTE COMPR #7A1					500				1440							EF-1	20	1		2
3		/		–						500				604						MUA-1	30	/		4
5		/	3	–							500				604					–	/			6
7		20	1	FAN COIL COOLER #7A2					240				604							–	/	3		8
9		20	1	COOLER LIGHTS #7A3						1000				X						SPARE	20	1		10
11		20	/	REMOTE COMPR #7A5							1200				X					SPARE	20	1		12
13		/		–					1200				X							SPARE	20	1		14
15		/	3	–						1200				X						SPARE	20	1		16
17		20	/	FAN COIL #7A6							1000				X					SPARE	20	1		18
19		/	2	–					1000				X							SPARE	20	1		20
21		20	1	FRZR LIGHT #7A4						1000				X						SPARE	20	1		22
23		20	/	COMPRESSOR #1B1							1200				X					SPARE	20	1		24
25		/	2	–					1200				X							SPARE	20	1		26
27		20	/	COMPRESSOR #1B1						1200				X						SPARE	20	1		28
29		/	2	–							1200				X					SPARE	20	1		30
31		20	1	2 DOOR DISPLAY #1B					1320				6480							RTU-2	60	/		32
33		20	1	2 DOOR DISPLAY #1B						1320				6480						–	/			34
35		20	1	ANSUL SYSTEM							500				6480					–	/	3		36
37		20	1	ROOF RECEPTACLES					360				6480							RTU-1	60	/		38
39		20	1	TOILET RECEPTACLES						360				6480						–	/			40
41		20	1	SPARE							X				6480					–	/	3		42

PANEL NOTES:

PHASE TOTALS ΦA: 15004 ΦB: 20144 ΦC: 13564

TOTAL CONNECTED VA	48712
CONNECTED VA (CODE N)	48712
CONNECTED VA (CODE L)	0
CONNECTED VA (CODE R)	0
CONNECTED VA (CODE K)	0
PANEL CONNECTED KVA	48.7
PANEL DEMAND KVA	48.7
PANEL DEMAND AMPS	135.2
HIGH Φ AMPS W/LCL	167.9

PROVIDE HANDLE TIE TO BREAKERS WHOSE HOMERUN HAVE COMMON NEUTRAL

PANEL: B

DATE: 11/22/20 TIME: 22:16:01
JOB: X

PANEL VOLTAGE: 208/120 3Φ 4 W
BUS: 200A
MAINS: MLO
AIC RATING: 10,000

CIRCUIT CODE: blank or N : NON-CONTINUOUS
L : LONG-CONTINUOUS
R : DEMANDABLE RECEPTACLES
K : KITCHEN NO. OF EQUIPMENT: 0

CKT NO	CODE	TRIP	POLE	LOAD DESIGNATION DESCRIPTION	(NOTE)	M	R	L	CONNECTED VA ΦA	ΦB	ΦC	ABC	ΦA	ΦB	ΦC	L	R	M	LOAD DESIGNATION (NOTE)	DESCRIPTION	TRIP	POLE	CODE	CKT NO
1		20	1	CONVENIENCE					540				1200							WINDOW RECEPTACLES	20	1		2
3		30	/	SELF SERVE #3C						1960				800						FUDGE PUMP #2E3 & 2E4	20	1		4
5		/		–							1960				1700					BLIZZARD MACHINE #2E2	20	1		6
7		/	3	–					1960				1800							ARCTIC RUSH #2F	20	1		8
9		30	/	SELF SERVE #3C						1960				500						AUTO FILL UNIT #2F1	20	1		10
11		/		–							1960				2250					VENTLESS OVEN #2G1	30	/		12
13		/	3	–					1960				2250							–	/	2		14
15		30	/	SELF SERVE #3A						1960				500						WORK FRZ #2G	20	1		16
17		/		–							1960				1500					ICE MACHINE #2J	20	/		18
19		/	3	–					1960				1500							–	/	2		20
21		30	/	SELF SERVE #3A						1960				1440						ICE MAKER #1C2	20	/		22
23		/		–							1960				1440					–	/	2		24
25		/	3	–					1960				1000							ICE TEA DISP # 1C4	20	1		26
27		20	1	TOPPING CABINET #3B						500				480						DRINK DISP #1C1	20	1		28
29		20	1	FUDGE PUMP							1000				150					OFFICE LIGHT-MS	20	1		30
31		20	1	CONVENIENCE RECEPT					360				800							KITCHEN LIGHTS	20	1		32
33		20	1	SPARE						X				600						DINING LIGHTS	20	1		34
35		20	1	WORK TOP FRZR #2G							500				1200					SIGNAGE	20	1		36
37		30	/	VENTLESS OVEN #2G1					2250				1200							SIGNAGE	20	1		38
39		/	2	–						2250				1200						SIGNAGE	20	1		40
41		20	1	BLIZZARD MACHINE #2E2							1700				1200					SIGNAGE	20	1		42

PANEL NOTES:

PHASE TOTALS ΦA: 9750 ΦB: 16110 ΦC: 9440

TOTAL CONNECTED VA	35300
CONNECTED VA (CODE N)	35300
CONNECTED VA (CODE L)	0
CONNECTED VA (CODE R)	0
CONNECTED VA (CODE K)	0
PANEL CONNECTED KVA	35.3
PANEL DEMAND KVA	35.3
PANEL DEMAND AMPS	98
HIGH Φ AMPS W/LCL	134.3

PROVIDE HANDLE TIE TO BREAKERS WHOSE HOMERUN HAVE COMMON NEUTRAL

△	DATE	REVISIONS

AGA & Associates, inc
P.O. BOX 370114
LAS VEGAS, NV. 89137
Tel No. (702) 461-2766
Fax No. (702) 240 6637

DAIRY QUEEN
TENANT IMPROVEMENT

7955 BLUE DIAMOND ROAD
LAS VEGAS, NEVADA

GENERAL NOTES
PANEL SCHEDULES

DRAWN	AOA
CHECKED	AOA
DATE	10-26-2020
SCALE	AS SHOWN
JOB NO.	20095
SHEET	E-2

EQUIPMENT SCHEDULE (PROVIDED BY DAIRY QUEEN)

NO.	QTY	ITEM	MANUFACTURER	MODEL NO.	VOLTAGE	PHASE	KW/HP	RECEPT	DIRECT	REMARKS
1A1	2	CASH REGISTER	IBM-POS	4840-544	120	1	200W	Y		
1B	2	2 DOOR DISPLAY (A/C-R)	MASTERBILT	DQCD-48-R	120	1	1.32KW	Y		
1B1	2	*REMOTE COMPRESSOR	MASTERBILT	MHLZ0071BQ	208	1	1.5 HP	Y		
1B2	1	"CAKE & TREATS" SIGN	SIGN SOURCE	ST4-F	120	1	.25 KW	Y		
1C1	1	DRINK HEAD / ICE DISPENSER	LANCER	ACIB SENSATION	120	1	3.5 AMP	Y		
1C2	1	ICE MAKER (W/VARI SMART- KVS	SCOTSMAN	C1030SW-32	208	1	11.0AMPS	Y		
1C3	1	*TURBO CARBONATOR	LANCER	QUOTE	120	1	VERIFY	Y		
1C4	1	ICED TEA DISPENCER	GOLD PEAK	BY OWNER/LOCALY	120	1	VERIFY	Y		
1H	1	5-PANEL DIGITAL MENU SYSTEM	CINEPLEX	QUOTE	120	1	2.0 KW	Y		
1J	7	VIDEO MONITOR	SRW5US	19 ' FLAT	120	1	0.1 KW	Y		
1J1	1	DRIVE-THRU TIMER MONITOR	HYPERACTIVE	0-TIMER	120	1	0.1 KW	Y		
1J2	5	PRINTER	EPSON	TM-88	120	1	0.1 KW	Y		
1J3	1	*D. T. HED SETD BASE STATION	HME	ION-IQ	120	1	0.2 KW	Y		
2E2	2	BLIZZARD MACHINE	HC DUKE	BM3	120	1	01.7 KW	Y		
2E3	1	DOUBLE CONE DIP	SERVER PRODUCTS	D-2 92020	120	1	0.1 KW	Y		
2E4	1	FUDGE PUMP	SERVER PRODUCTS	EZT-S-85790	120	1	0.5 KW	Y		
2F	1	ARCTIC RUSH FR'ZR.	HC DUKE	145	120	1	NOTE 10	Y		
2F1	1	AUTO FILL UNIT (FOR HC DUKE)	LANCER	85-0084-01	120	1	0.5 KW	Y		
2G	1	36" WORK TOP FREEZER	BEVERAGE-AIR	WTF-36A	120	1	1/3 HP	Y		
2G1	1	TABLETOP VENTLESS OVEN	MERRYCHEF	EIKON-E2s	208	1	4.5 KW	Y		
2J	1	ICE MAKER	SCOTSMAN	C0830SW-32						
3A	1	CAB SOFTSERVE FREEZER (AC/R)	HC-DUKE	GES-103	208	3	NOTE 6	Y		
3B	1	TOPPING CABINET - COOLER BASE	NORLALKE	ZR152-SMSO-21DQ	120	1	1/4 HP	Y		
3B2	2	FUDGE PUMP	SERVER PRODUCTS	EZT-S-85790	120	1	0.5 KW	Y		
3C	1	CAB SOFTSERVE FREEZER (AC/R)	HC-DUKE	GES-103	208	3	NOTE 6	Y		
4C1	2	CASH REGISTER	IBM-POS	4840-544	120	1	0.2 KW	Y		
4C4	1	ICED TEA DISPENCER	GOLD PEAK	BY OOWNER/LOCALLY	120	1	VERIFY	Y		
4C5	1	COFFEE MAKER	BUNN	CWTF 15-2	120	1	1.57 KW	Y		
4D	1	DRINK HEAD/ ICE BIN (8 VALVE)	LANCER	ICD 2300	120	1	1.55 KW	Y		
4E	1	SINGLE BLAST FREEZER	MASTERBILT	IHC-27	208	1	1 HP	Y		
4F1	1	COPY CAKE PROJECTOR	KOPYKAKE	K-1000	120	1	1.2 KW	Y		
4F2	1	DOUBLE CONE DIP	SERVER PRODUCTS	D1-2 92020	120	1	0.1 KW	Y		
5B1	1	6-DRAWER HOLDING CABINET	DUKE	FWM3-23-120	120	1	0.2 KW	Y		
5B2	1	TABLE TOP VENTLESS OVEN	MERRYCHEF	EIKON-E2s	208	1	4.5 KW	Y		
5B3	1	27" UNDER COUNTER REFRIGERATOR	TRUE	TUC-27R-LP	120	1	1/6 HP	Y		
5B6	1	COMMERCIAL MICROWAVE OVEN	AMANA	DQ22HSI	208	1	3.2 KW	Y		
5D1	1	6-DRAWER HOLDING CABINET	DUKE	FWM3-23-120	120	1	0.2 KW	Y		
5D2	1	TABLE TOP VENTLESS OVEN	MERRYCHEF	EIKON-E2s	208	1	4.5 KW	Y		
5D3	1	27" UNDER COUNTER REFRIGERATOR	TRUE	TUC-27R-LP	120	1	1/6 HP	Y		
5D6	1	COMMERCIAL MICROWAVE OVEN	AMANA	DQ22HSI	208	1	3.2 KW	Y		
5F1	1	BUN TOASTER	ROUNDUP	VCT-1000	208	1	2.6 KW	Y		
5F3	1	COMMERCIAL MICROWAVE OVEN (LARGE)	AMANA	DQ22HSI	208	1	3.2 KW	Y		
5H	1	DEEP WELL FREEZER	SILVERKING	SKMF34/10	120	1	1/4 HP	Y		
5J	1	CHAIN BROILER	NIECO	JF63	120	1	2 AMPS	Y		
5K	1	BATTERY OF (3) FRYERS W/ FILTER	FRYMASTER	FPGL330CA-DQ	120	1	1.0 KW	Y		
5N	1	68" WORK TOP FREEZER	CONTINENTAL	CFA68-BS 4D	120	1	1/2 HP	Y		
5N1	1	36" FRY DUMP	SYEELYE CRAFTSMAN	100-036	120	1	1.1 KW	Y		
5N2	1	HEATED GRAVY PUMP	SERVER	FS-11, CP-10 1/2	120	1	0.4 KW	Y		
5N3	1	HEATED GRAVY PUMP	SERVER	FS-11, CP-10 1/2	120	1	0.5 KW	Y		
6E	1	COOKING OIL RECYCLING SYSTEM	MAHONEY ENVIRONMENTAL	MST-12	120	1	20 AMPS	Y		
7A1	1	* REMOTE COMPRESSOR (COOLER)	KOLPAK	VERIFY	208	3	0.75 HP	Y		
7A2	1	* STANDARD UNIT COOLER	KOLPAK	VERIFY	120	1	1.6 AMPS	Y		
7A3	1	* STANDARD UNIT COOLER	KOLPAK	VERIFY	120	1	1.0 KW	Y		
7A4	1	* DOOR / CONTROLS	KOLPAK	VERIFY	208	3	2.5 HP	Y		
7A5	1	* REMOTE COMPRESSOR (FREEZER)	KOLPAK	VERIFY	208	1	9.8 AMPS	Y		
7A6	1	* STANDARD UNIT COOLER	KOLPAK	VERIFY	120	1	1.0 KW	Y		
9A	2	* SINGLE FACE DQ LOGO (4'-3"X6'-6")	ALLEN INDUSTRIES	QUOTE	120	1	0.6 KW	Y		
9B	2	* S.F. GRILL & CHILL (2'-1"X8'-5")	ALLEN INDUSTRIES	QUOTE	120	1	0.5 KW	Y		
9D	1	* DQ "GRILL & CHILL" D.T. MENU BOARD	LSI	D10420SSLDN	120	1	0.4 KW	Y		
9E	3	* SITE DIRECTIONAL SIGNAL	ALLEN INDUSTRIES	QUOTE	120	1	0.12 KW	Y		

LIGHTING FIXTURE SCHEDUTE (GRILL & CHILL)

PROVIDE FIXTURE SPECIFIED OR EQUAL

SYM	LOCATION	FIXTURE MFGR.	FIXTURE CATALOG NO.	LAMP MFGR.	LAMP CATALOG NO.	LAMP WATTAGE	QUANT. LAMP/FIX.	TYPE OF MOUNT	REMARKS
AAI	DINING AREA	MORGAN HOPE	MH-PENI-BLK-RS	TCP	LEDIIE26SA1930K	11 W	1	PENDANT	MOUNT BOTTOM OF FIXTURE AT 80" AFF
BB	DINING AREA	CURRENT BY GE	LVT24A040MM835VQLTWHITE	–	–	39.5 W	–	LAY-IN	2X4
BBE	DINING AREA	CURRENT BY GE	LVT24A040MM835VQLTWHITE WITH EM	–	–	39.5 W	–	LAY-IN	2X4 WITH BATT BACKUP
CC	LIGHT TRACK		4' H TRACK (OR) 8' H TRACK	–	4HT-BK 8HT-BK	–	–	CEILING	USED W/FIXTURES "JJ" & "JJI" VERIFY LENGTHS
FF	DINING AREA	LUM-TECH	LH-310 WHITE LT-3565N	GE	35196 LED7XDIMRX1683035 3000K	7 W	1	RECESSED	DIRECTIONAL DOWNLIGHT
HH	DINING AREA	CURRENT BY GE	LRXR6108835MD/FRAME6R	–		12W	–	RECESSED	DIRECTIONAL DOWNLIGHT
HHE	DINING AREA	CURRENT BY GE	LRXR6108835MD-EM LRXEMBKIT07/FRAME6R	–		12W	–	RECESSED	AMBIENT DOWNLIGHT W/ EMERGENCY BATTERY BACKUP
JJ	KICH. PASS-THRU	TROY-CSL	KL18141 22"HEAT LAMP120/60/1PH CLEAR BRUSHED METAL	–	SHAT-R-SHIELD017191-250BR40/I SHATTER RES. CLEAR HEAT LAMP			TRACK	USE WITH TRACK CC 22" CORD LENGTH
JJI	KICH. PASS-THRU	TROY-CSL	KL18142 74"HEAT LAMP 120/60/1PH CLEAR BRUSHED METAL	–	SHAT-R-SHIELD017191-250BR40/I SHATTER RES. CLEAR HEAT LAMP			TRACK	USE WITH TRACK CC 74" CORD LENGTH
LL	KICH. CHEN/STR.	LSI INDUSTRIES	ELFP24 LED40 UE	–	–	45W		LAY-IN	2X4 W/ACRYLIC LENS
LLE	KICH. CHEN/STR.	LSI INDUSTRIES	ELFP24 LED40 UE EM			45W		LAY-IN	2X4 W/ACRYLIC LENS & EMERGENCY BATTERY BACKUP
RR	EXIT. EMERGENCY	EXITRONIX	VLED-U-WH-EL90			2.5W		WALL/CEILING	LOCATIONS TO COMPLY WITH PREVALING CODES

NOTES:

* WIRING METHODE FOR ALL RECESSED LIGHT FIXTURES SHALL BE CONDUIT (UNLESS OTHRWISE NOTED), J-BOXES WITH FLEX DROPS (PER ARTICLE 410, 370, 350, 300 PER LATEST NEC).
* FIXTURES & VARIOUS ELECTRICAL DEVICES SHALL BE INSTALLED IN CEILING WITH PROPER SELF SUPPORTING METHODE. OPPOSITE CORNERS OF 2X4 FIXTURES TO BE SUPPORTED INDEPENDENTLY WITH WIRES FROM CEILING STRUCTURE(PER NEC)
* VERIFY WITH LOCAL GOVERNING OFFICIALS THE LOCATIONS OR ADDITIONS OF EMERGENCY LIGHTING AND PROVIDE AS REQUIRED.
* FOR PRODUCT AND PURCHASING INFORMATION CONTACT LATRICIA ALLISON AT HJC CORPORATION - 800- 459-7099

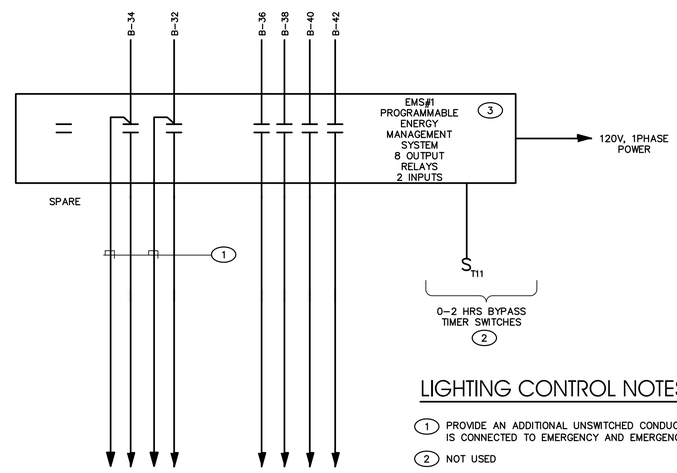

LIGHTING CONTROL NOTES

1. PROVIDE AN ADDITIONAL UNSWITCHED CONDUCTOR IF CIRCUIT IS CONNECTED TO EMERGENCY AND EMERGENCY/EXIT FIXTURE
2. NOT USED
3. ENERGY MANAGEMENT SYSTEM PANELTO COMPLY WITH IECC REQUIREMENTS. (SECTION C405.2.6.4)
4. PRIOR TO FINAL INSPECTION APPROVAL, A FUNCTIONAL LIGHTING TEST AND SYSTEM COMMISSIONING REPORT WILL NEED TO BE PERFORMED PER CLARK COUNT TECHNICAL GUIDELINE TG-92 AND SUBMITTED TO INSPECTOR.

PROFESSIONAL ENGINEER
STATE OF NEVADA
DANIEL ARCHES
Exp. 12-31-20
ELECTRICAL
No.011453
11/22/20

△	DATE	REVISIONS

AGA & Associates, inc
P.O. BOX 370114
LAS VEGAS, NV. 89137
Tel No. (702) 461-2766
Fax No. (702) 240 6637

DAIRY QUEEN
TENANT IMPROVEMENT

7955 BLUE DIAMOND ROAD
LAS VEGAS, NEVADA

GENERAL NOTES
PANEL SCHEDULES

DRAWN	AOA
CHECKED	AOA
DATE	10-26-2020
SCALE	AS SHOWN
JOB NO.	20095
SHEET	E-2.1

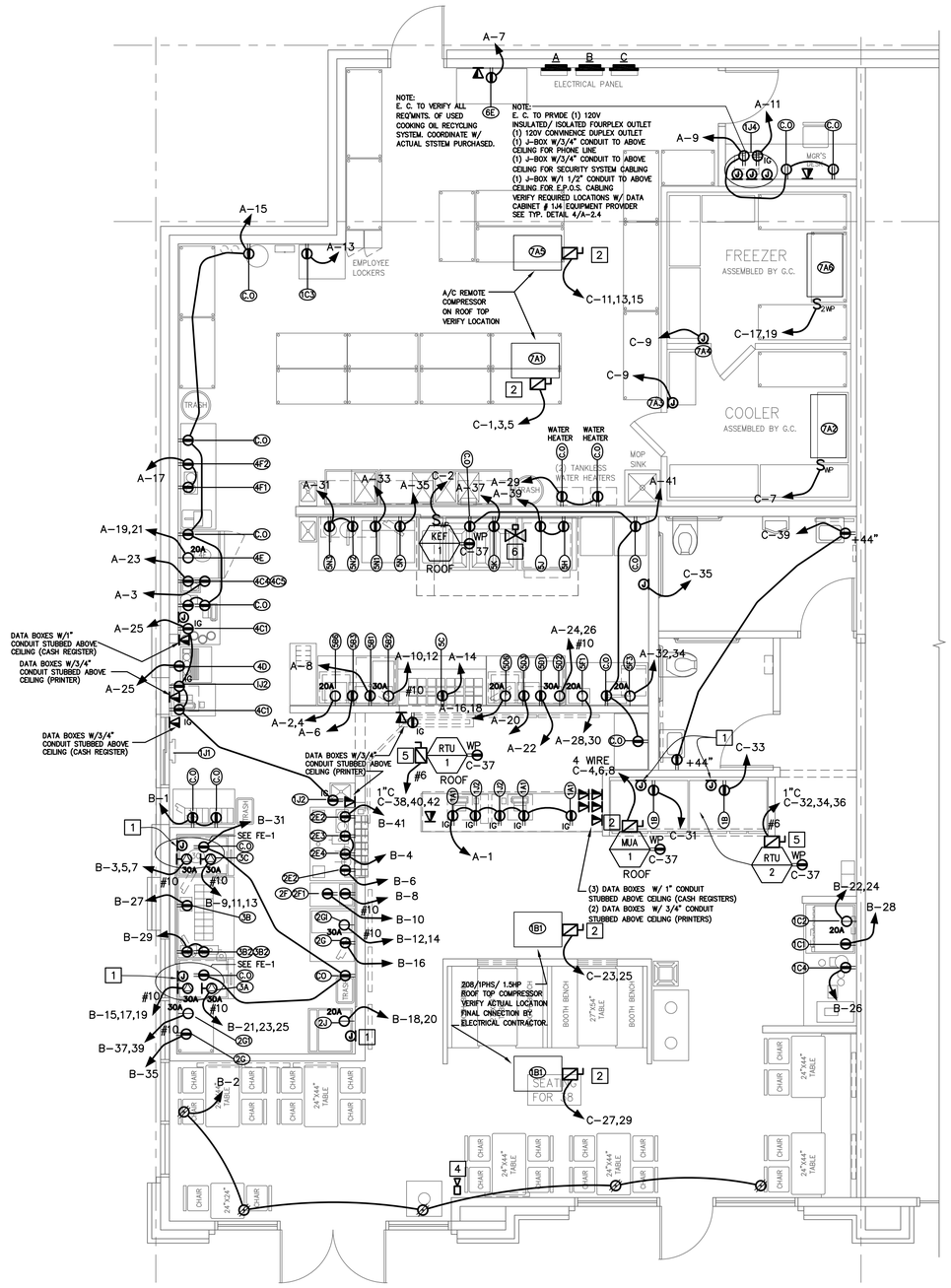

POWER PLAN

SCALE: 1/4"=1'-0"

SHEET GENERAL NOTES

1. PROVIDE CONTROL WIRING AND CONDUIT FOR HVAC AS REQUIRED BY THE MECHANICAL DRAWINGS, INCLUDING BUT NOT LIMITED TO, TSTAT, DUCT DETECTOR, HORN STROBE, ETC. PROVIDE HORN STROBE FOR DUCT DETECTOR SMOKE DETECTION IF REQUIRED BY AUTHORITY HAVING JURISDICTION. DETECTION OF SMOKE TO SHUT THE HVAC UNIT.
2. IF HVAC IS PROVIDED WITH A DUCT DETECTOR. PROVIDE A 120V CIRCUIT TO THE DUCT DETECTOR AND CONNECT TO AVAILABLE SPARE BREAKER OF THE NEAREST PANEL.
3. ONLY THE CIRCUIT NUMBERS AND HOMERUNS ARE SHOWN. CONTRACTOR TO BE RESPONSIBLE FOR DETERMINING THE NUMBER OF WIRES AND CONDUIT SIZE BASED ON NEC TO MEET THE INTENT OF THE PLAN. THEY SHALL BE CIRCUITED TO MINIMIZE VOLTAGE DROP. HOMERUNS CAN BE COMBINE UP TO A MAX OF THREE CIRCUITS. PROVIDE UNSWITCHED LEG FOR EMERGENCY AND EXIT LIGHTS
4. THE TELEPHONE/DATA SYMBOL REPRESENT THE LOCATION OF THE DEVICE AND THAT CONDUIT SHOULD BE RUN FROM THE DEVICE TO THE IDF, MDF OR TELEPHONE ROOM. IT DOES NOT INDICATE THE NUMBER OR TYPES OF CABLE OR PLATE TO RUN. CONTRACTOR TO VERIFY THIS REQUIREMENT WITH TENANT'S INFORMATION TECHNOLOGY (IT) REPRESENTATIVE.
5. GFCI PROTECTED RECEPTACLE SHALL BE READILY ACCESSIBLE. IF THE RECEPTACLE IS NOT READILY ACCESSIBLE, USE A GFCI BREAKER INSTEAD.
6. IMPORTANT: SEE SHEET KITCHEN CONSULTANT SHEET FE-1 AND FE-2 FOR ELEVATIONS, DIMENSIONS AND OTHER REQUIREMENTS FOR INSTALLATION OF POWER AND DATA RECEPTACLES FOR KITCHEN EQUIPMENT. CONTRACTOR TO INCLUDE ALL INSTALLATION REQUIREMENT SHOWN ON KITCHEN DWGS. THE ENTIRE KITCHEN DWGS SHALL BE PART OF THIS ELECTRICAL SET. ALL ELECTRICAL REQUIREMENT OF THE ALL KITCHEN DWGS SHALL BE PART OF THE BID AND INSTALLATION SET. OBTAIN A COPY OF THE SET FROM THE GENERAL CONTRACTOR
7. PROVIDE EYS SEALS FOR ALL CONDUITS ENTERING THE COOLER/FREEZER BOX
8. PROVIDE INTERLOCK BETWEEN EF, MUA AND ALL EQUIPMENT UNDER THE HOOD. ACTIVATION OF ANSUL SYSTEM TO DISCONNECT POWER TO THOSE EQUIPMENT.

SHEET NOTES

1	J BOX FOR COMPRESSOR CONNECT TO ROOF
2	30AS/XXAF/3P/3R FUSED DISCONNECT SWITCH. SIZE FUSE PER MANUFACTURER RECOMMENDATION
3	30AS/XXAF/2P/3R FUSED DISCONNECT SWITCH. SIZE FUSE PER MANUFACTURER RECOMMENDATION
4	HORN STROBE. CONNECT TO BLDG FSCP
5	60AS/60AF/3P/3R FUSED DISCONNECT SWITCH.
6	EMERGENCY GAS SHUT OFF VALVE. CONNECT TO ANSUL SYSTEM

PROFESSIONAL ENGINEER STATE OF NEVADA
CARMEL ARCHES
Exp. 12-31-20
ELECTRICAL
No. 011453
11/22/20

△	DATE	REVISIONS

AGA & Associates, inc
P.O. BOX 370114
LAS VEGAS, NV. 89137
Tel No. (702) 461-2766
Fax No. (702) 240 6637

DAIRY QUEEN
TENANT IMPROVEMENT

7955 BLUE DIAMOND ROAD
LAS VEGAS, NEVADA

POWER PLAN

DRAWN	AOA
CHECKED	AOA
DATE	10-26-2020
SCALE	AS SHOWN
JOB NO.	20095
SHEET	E-4

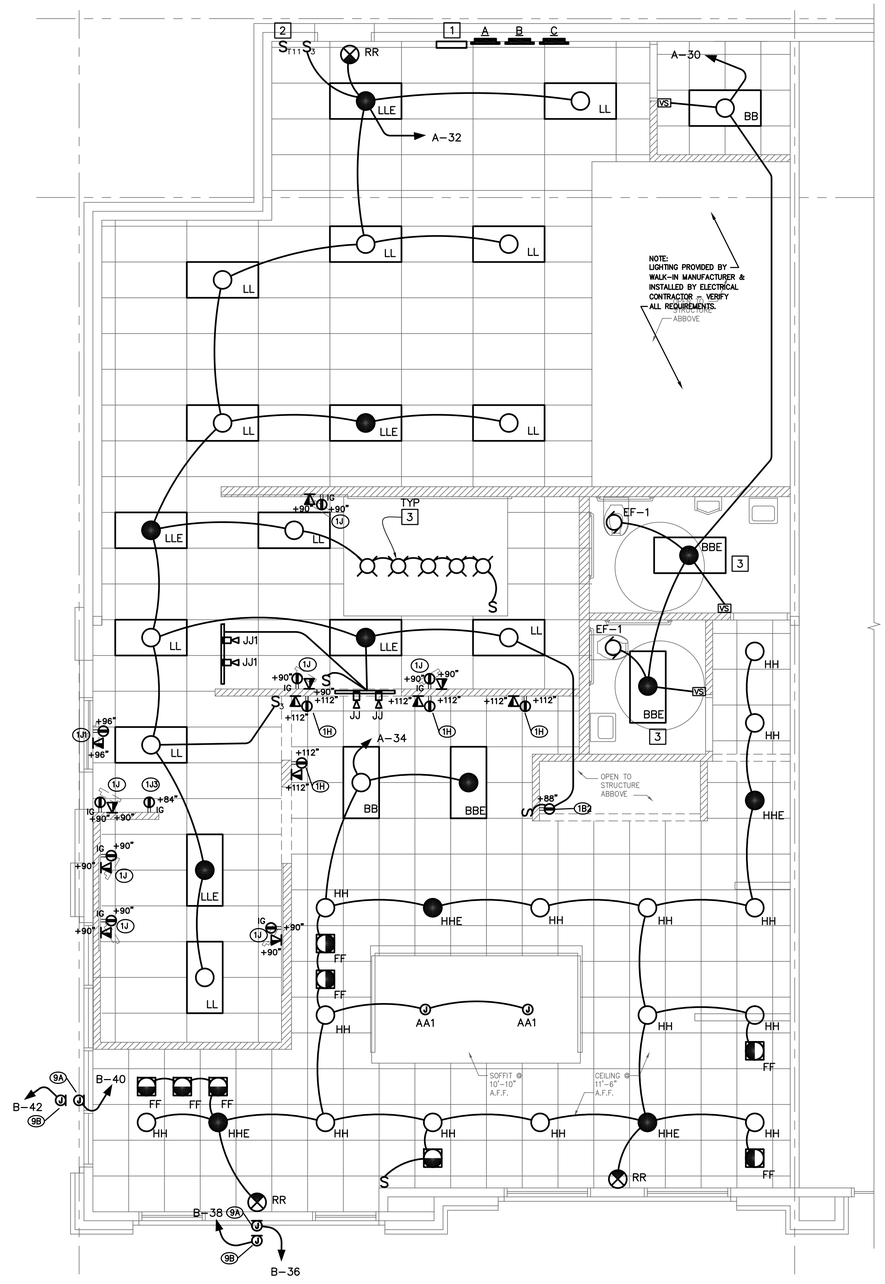

LIGHTING PLAN

SCALE: 1/4"=1'-0"

SHEET GENERAL NOTES

1. PROVIDE DOUBLE HOT WIRE FOR ALL CIRCUITS CONNECTED TO EMERGENCY FIXTURES. DOUBLE HOT WIRE NOT SHOWN BUT MUST BE PROVIDED. SEE ENERGY MANAGEMENT PANEL WIRING DIAGRAM.
2. ONLY THE CIRCUIT NUMBERS AND HOMERUNS ARE SHOWN. CONTRACTOR TO BE RESPONSIBLE FOR DETERMINING THE NUMBER OF WIRES AND CONDUIT SIZE BASED ON NEC TO MEET THE INTENT OF THE PLAN. THEY SHALL BE CIRCUITED TO MINIMIZE VOLTAGE DROP. HOMERUNS CAN BE COMBINE UP TO A MAX OF THREE CIRCUITS. PROVIDE UNSWITCHED LEG FOR EMERGENCY AND EXIT LIGHTS
3. WHERE A SWITCH CONTROL A LIGHTING LOAD, A GROUNDED CIRCUIT CONDUCTOR SHALL BE PROVIDED AT THE SWITCH.

VS WALL MOUNTED VACANCY SENSOR. DUAL TECHNOLOGY.

SHEET NOTES

1. ENERGY MANAGEMENT PANEL. SEE WIRING DIARGRAM.
2. 0-2 HRS TIMER SWITCH. PER IECC REQUIREMENTS
3. LIGHT FIXTURE SUPPLIED BY HOOD MANUFACTURER. INSTALLED BY E.C.

PROFESSIONAL ENGINEER
DANIEL ARCHES
Exp. 12-31-20
ELECTRICAL
No. 011453
STATE OF NEVADA
11/22/20

△	DATE	REVISIONS

AOA & Associates, inc
P.O. BOX 370114
LAS VEGAS, NV. 89137
Tel No. (702) 461-2766
Fax No. (702) 240 6637

DAIRY QUEEN
TENANT IMPROVEMENT

7955 BLUE DIAMOND ROAD
LAS VEGAS, NEVADA

LIGHTING PLAN

DRAWN	AOA
CHECKED	AOA
DATE	10-26-2020
SCALE	AS SHOWN
JOB NO.	20095
SHEET	E-4

COM*check* Software Version 4.1.1.0

Interior Lighting Compliance Certificate

Project Information

Energy Code: 2018 IECC
Project Title: DAIRY QUEEN TENANT IMPROVEMENT
Project Type: New Construction

Construction Site: Owner/Agent: Designer/Contractor:

Additional Efficiency Package(s)

Unspecified

Allowed Interior Lighting Power

A Area Category	B Floor Area (ft2)	C Allowed Watts / ft2	D Allowed Watts (B X C)
1-BUILDING INTERIOR (Retail)	2573	1.06	2727
		Total Allowed Watts =	2727

Proposed Interior Lighting Power

A Fixture ID : Description / Lamp / Wattage Per Lamp / Ballast	B Lamps/ Fixture	C # of Fixtures	D Fixture Watt.	E (C X D)
1-BUILDING INTERIOR (Retail)				
LED 1: AA1: PENDANT: Other:	1	2	11	22
LED 2: BB/BBE: 2 X 4 LAY-IN: Other:	1	5	40	198
LED 4: FF: RECESSED DOWNLIGHT: Other:	1	8	7	56
LED 5: HH/HHE: RECESSED DOWNLIGHT: Other:	1	18	12	216
LED 6: LL/LLE: 2 X 4 LAY-IN: Other:	1	16	45	720
		Total Proposed Watts =		1212

Interior Lighting PASSES: Design 56% better than code

Interior Lighting Compliance Statement

Compliance Statement: The proposed interior lighting design represented in this document is consistent with the building plans, specifications, and other calculations submitted with this permit application. The proposed interior lighting systems have been designed to meet the 2018 IECC requirements in COM*check* Version 4.1.1.0 and to comply with any applicable mandatory requirements listed in the Inspection Checklist.

Name - Title Signature Date

COM*check* Software Version 4.1.1.0

Inspection Checklist

Energy Code: 2018 IECC

Requirements: 0.0% were addressed directly in the COM*check* software

Text in the "Comments/Assumptions" column is provided by the user in the COMcheck Requirements screen. For each requirement, the user certifies that a code requirement will be met and how that is documented, or that an exception is being claimed. Where compliance is itemized in a separate table, a reference to that table is provided.

Section # & Req.ID	Plan Review	Complies?	Comments/Assumptions
C103.2 [PR4][1]	Plans, specifications, and/or calculations provide all information with which compliance can be determined for the interior lighting and electrical systems and equipment and document where exceptions to the standard are claimed. Information provided should include interior lighting power calculations, wattage of bulbs and ballasts, transformers and control devices.	☐Complies ☐Does Not ☐Not Observable ☐Not Applicable	

Additional Comments/Assumptions:

1 High Impact (Tier 1) | 2 Medium Impact (Tier 2) | 3 Low Impact (Tier 3)

Section # & Req.ID	Rough-In Electrical Inspection	Complies?	Comments/Assumptions
C405.2.2.2 [EL22][1]	Spaces required to have light-reduction controls have a manual control that allows the occupant to reduce the connected lighting load in a reasonably uniform illumination pattern >= 50 percent.	☐Complies ☐Does Not ☐Not Observable ☐Not Applicable	
C405.2.1, C405.2.1.1 [EL18][1]	Occupancy sensors installed in classrooms/lecture/training rooms, conference/meeting/multipurpose rooms, copy/print rooms, lounges/breakrooms, enclosed offices, open plan office areas, restrooms, storage rooms, locker rooms, warehouse storage areas, and other spaces <= 300 sqft that are enclosed by floor-to-ceiling height partitions. Reference section language C405.2.1.2 for control function in warehouses and section C405.2.1.3 for open plan office spaces.	☐Complies ☐Does Not ☐Not Observable ☐Not Applicable	
C405.2.1.2 [EL19][1]	Occupancy sensors control function in warehouses: In warehouses, the lighting in aisleways and open areas is controlled with occupant sensors that automatically reduce lighting power by 50% or more when the areas are unoccupied. The occupant sensors control lighting in each aisleway independently and do not control lighting beyond the aisleway being controlled by the sensor.	☐Complies ☐Does Not ☐Not Observable ☐Not Applicable	
C405.2.1.3 [EL20][1]	Occupant sensor control function in open plan office areas: Occupant sensor controls in open office spaces >= 300 sq.ft. have controls 1) configured so that general lighting can be controlled separately in control zones with floor areas <= 600 sq.ft. within the space, 2) automatically turn off general lighting in all control zones within 20 minutes after all occupants have left the space, 3) are configured so that general lighting power in each control zone is reduced by >= 80% of the full zone general lighting power within 20 minutes of all occupants leaving that control zone, and 4) are configured such that any daylight responsive control will activate space general lighting or control zone general lighting only when occupancy for the same area is detected.	☐Complies ☐Does Not ☐Not Observable ☐Not Applicable	
C405.2.2, C405.2.2.1, C405.2.2.2 [EL21][2]	Each area not served by occupancy sensors (per C405.2.1) have time-switch controls and functions detailed in sections C405.2.2.1 and C405.2.2.2.	☐Complies ☐Does Not ☐Not Observable ☐Not Applicable	

1 High Impact (Tier 1) | 2 Medium Impact (Tier 2) | 3 Low Impact (Tier 3)

Section # & Req.ID	Rough-In Electrical Inspection	Complies?	Comments/Assumptions
C405.2.3.1, C405.2.3.2 [EL23][2]	Daylight zones provided with individual controls that control the lights independent of general area lighting. See code section C405.2.3 Daylight-responsive controls for applicable spaces, C405.2.3.1 Daylight responsive control function and section C405.2.3.2 Sidelit zone.	☐Complies ☐Does Not ☐Not Observable ☐Not Applicable	
C405.2.4 [EL26][1]	Separate lighting control devices for specific uses installed per approved lighting plans.	☐Complies ☐Does Not ☐Not Observable ☐Not Applicable	
C405.2.4 [EL27][1]	Additional interior lighting power allowed for special functions per the approved lighting plans and is automatically controlled and separated from general lighting.	☐Complies ☐Does Not ☐Not Observable ☐Not Applicable	
C405.3 [EL6][1]	Exit signs do not exceed 5 watts per face.	☐Complies ☐Does Not ☐Not Observable ☐Not Applicable	

Additional Comments/Assumptions:

1 High Impact (Tier 1) | 2 Medium Impact (Tier 2) | 3 Low Impact (Tier 3)

Section # & Req.ID	Final Inspection	Complies?	Comments/Assumptions
C303.3, C408.2.5.2 [FI17][3]	Furnished O&M instructions for systems and equipment to the building owner or designated representative.	☐Complies ☐Does Not ☐Not Observable ☐Not Applicable	
C405.4.1 [FI18][1]	Interior installed lamp and fixture lighting power is consistent with what is shown on the approved lighting plans, demonstrating proposed watts are less than or equal to allowed watts.	☐Complies ☐Does Not ☐Not Observable ☐Not Applicable	*See the Interior Lighting fixture schedule for values.*
C408.2.5.1 [FI16][3]	Furnished as-built drawings for electric power systems within 90 days of system acceptance.	☐Complies ☐Does Not ☐Not Observable ☐Not Applicable	
C408.3 [FI33][1]	Lighting systems have been tested to ensure proper calibration, adjustment, programming, and operation.	☐Complies ☐Does Not ☐Not Observable ☐Not Applicable	

Additional Comments/Assumptions:

1 High Impact (Tier 1) | 2 Medium Impact (Tier 2) | 3 Low Impact (Tier 3)

PROFESSIONAL ENGINEER
DANIEL ARCHES
Exp. 12-31-20
ELECTRICAL
No.011453
STATE OF NEVADA
11/22/20

△	DATE	REVISIONS

AOA & Associates, inc
P.O. BOX 370114
LAS VEGAS, NV. 89137
Tel No. (702) 461-2766
Fax No. (702) 240 6637

DAIRY QUEEN
TENANT IMPROVEMENT

7955 BLUE DIAMOND ROAD
LAS VEGAS, NEVADA

IECC

DRAWN	AOA
CHECKED	AOA
DATE	10-26-2020
SCALE	AS SHOWN
JOB NO.	20095
SHEET	E-5

PLUMBING FIXTURE SCHEDULE

ITEM	FIXTURE	ROUGH-IN CONNECTIONS						
		TRAP	WASTE	VENT	COLD WATER	HOT WATER	GAS	
FD-1	FLOOR DRAIN	3"	--	2"	--	--	--	ZURN MODEL ZN415-2NL-73 WITH ROUND FUNNEL.
FD-2	FLOOR DRAIN	3"	--	2"	--	--	--	ZURN MODEL ZN415-2NH-5B.
FS-1	FLOOR SINK	3"	--	2"	--	--	--	ZURN MODEL FD-2370-PV3 WITH 12" PVC TOP.
FCO	FLOOR CLEANOUT	--	--	--	--	--	--	ZURN ZN1400, DURA-COATED CAST IRON WITH ROUND ADJUSTABLE SCORIATED SECURED NICKEL BRONZE TOP. OR EQUAL. SIZE AS SHOWN ON DRAWINGS.
WCO	WALL CLEANOUT	--	--	--	--	--	--	ZURN Z1441-BP, DURA-COATED CAST IRON, CAST BRONZE TAPER THREADED PLUG WITH STAINLESS STEEL COVER AND SCREW. OR EQUAL. SIZE AS SHOWN ON DRAWINGS.
TP-1	TRAP PRIMER	--	--	--	1/2"	--	--	ZURN Z1022-XL, LOW-LEAD SANI-GARD AUTOMATIC TRAP PRIMER, ALL BRONZE BODY WITH INTEGRAL VACUUM BREAKER, NON-LIMITING INTERNAL OPERATING PISTON, STAINLESS STEEL SPRING, REMOVABLE BRONZE SEAT WITH METERING ORIFICE, AND SEALED BRONZE COVER. OR EQUAL.
L-1	LAVATORY	—	2"	2"	1/2"	1/2"	--	SLOAN MODEL SS-3003 WHITE 3-HOLE, CODE 3873003. FAUCET: ZURN MODEL Z7440-XL-FC SINGLE LEVER HANDLE (4" CENTER) W/METAL OPEN GRID STRAINER. CHROME PLATED ANGLE STOPS. CHROME PLATED 17 GAUGE METAL P-TRAP. PROVIDE ADA WRAPS ON DRAIN AND WATER SUPPLY LINES.
U-1	URINAL	—	2"	2"	3/4"	--	--	SLOAN MODEL SU-1009-A UNIVERSAL HIGH-EFFICIENCY. FLUSHOMETER VALVE: TOTO TEUIUN12#CP, 0.125 GPF ECOPOWER (HANDS FREE). INCLUDES 3/4" VACUUM BREAKER AND 3/4" ANGLE STOP SET.
WC-1	WATER CLOSET	—	4"	2"	3/4"	--	--	TOTO MODEL CST744EB#01 (ADA: CST744ELB#01). ECO DRAKE E-MAX 1.28 GPF (WHITE) WITH BOLT DOWN TANK LID. CHROME PLATED ANGLE STOP, SOLID PLASTIC ELONGATED OPEN FRONT SEAT W/CHECK HINGE (WHITE).
MS-1	MOP SINK	—	3"	2"	1/2"	1/2"	--	FIAT "MOLDED STONE" MSB 24x24, 10" DEEP. RECESSED W/WALL FLANGE. FAUCET: FIAT SERVICE FAUCET MODEL #830-AA.

GENERAL NOTE: NEW, REMODEL, OR REPLACEMENT PLUMBING FIXTURES SHALL BE CERTIFIED BY THE WATERSENSE PROGRAM OR COMPLY WITH THE REVISED AMENDMENTS OF CHAPTERS 25.08 AND 25.10 OF THE CLARK COUNTY CODE.

PLUMBING EQUIPMENT SCHEDULE

SYMBOL	MANUFACTURER & MODEL NUMBER	TYPE	GALLONS STORAGE	INPUT (MBH)	V/PH	MINIMUM RECOVERY AT 35°F RISE	PIPE SIZE CONN.	WEIGHT LBS.	REMARKS
CP-1	BELL & GOSSETT NBF-8S/LW	CIRCULATING PUMP	-	-	115/1	-	1/2"	9	LEAD FREE BRONZE AND STAINLESS STEEL BODIED.
ET-1	AMTROL THERM-X-TROL ST-5-C	EXPANSION TANK	2.1	-	-	-	3/4"	21	CONSTRUCTED PER ASME CODE -SECTION VIII.
DWH-1	RINNAI MTO-CT-TRWO2i	TANKLESS WATER HEATER	-	180	208/3	7.5 GPM	3/4"	-	TWO UNIT INTERIOR WALL HANGING RACK. WATER HEATERS RINNAI MODEL C199i

PLUMBING NOTES

GENERAL NOTES:

1. ALL WORK SHALL CONFORM TO THE LATEST ADOPTED AND AMENDED CITY OF LAS VEGAS BUILDING CODES (2018 INTERNATIONAL BUILDING CODE, 2018 UNIFORM MECHANICAL CODE, 2018 UNIFORM PLUMBING CODE, 2017 NATIONAL ELECTRICAL CODE, 2018 INTERNATIONAL ENERGY CONSERVATION CODE) AND ALL FEDERAL, STATE AND LOCAL REGULATIONS.
2. SUBSTITUTIONS: BIDDERS WISHING TO OBTAIN APPROVAL OF AN ARTICLE, DEVICE, PRODUCT, MATERIAL, FIXTURE, FORM OR TYPE OF CONSTRUCTION OTHER THAN THOSE SPECIFIED BY NAME, MAKE OR CATALOG NUMBER, SHALL REQUEST VERBAL APPROVAL FROM THE ARCHITECT NOT LESS THAN TEN (10) DAYS BEFORE THE BID DUE DATE. WRITTEN APPROVAL CANNOT BE FINALIZED UNTIL SUBMITTALS ARE EXAMINED.
3. CONDENSATE DRAINAGE:
COORDINATE ELEVATION OF AIR CONDITIONING UNITS REQUIRING CONNECTIONS WITH HVAC SECTION OF THE WORK SO THAT PROPER SLOPE OF CONDENSATE LINES CAN BE MET. NOTIFY THE HVAC INSTALLERS WELL IN ADVANCE OF THE INSTALLATION OF THE UNITS OF THE MINIMUM REQUIRED ELEVATION.
4. AREA SEPARATION WALLS: WHERE PLUMBING PENETRATES THE AREA SEPARATION WALL SURFACE, THE SECTION PASSING THROUGH THE WALL SURFACE AND THE FIXTURE CONNECTIONS ATTACHED THERETO, SHALL BE ONLY OF METAL.
5. WATER HAMMER ARRESTORS SHALL BE SELECTED AND INSTALLED IN ACCORDANCE WITH THE PLUMBING AND DRAINAGE INSTITUTE PUBLICATION PDI WH-201 "WATER HAMMER ARRESTOR STANDARD".

UTILITY NOTES:

1. WATER SERVICE AND METER: ARRANGE FOR INSTALLATION OF WATER SERVICE(S) AND METER(S). PAY ALL INSTALLATION COSTS AND ASSESSMENTS AS REQUIRED (VERIFY WITH ARCHITECT). SEE WATER PRESSURE ANALYSIS AND CALCULATIONS THIS SHEET.
2. SEWER: ARRANGE FOR CONNECTION TO STREET MAIN OR SEWER LATERAL. PAY CONNECTION CHARGES AND/OR INSTALL SEWER LATERAL AS REQUIRED. ELEVATIONS SHOWN ON PLAN ARE FOR REFERENCE ONLY. PHYSICALLY VERIFY THAT BUILDING/SITE SEWERS CAN BE INSTALLED WITH PROPER SLOPE AND CONNECTED TO SEWER MAIN PRIOR TO INSTALLING ANY PIPING.
3. WATER, SEWER AND STORM DRAIN PIPING ON THE PLUMBING PLANS IS SHOWN UP TO THE 5-FOOT LINE. FOR CONTINUATION, SEE CIVIL DRAWINGS. VERIFY ALL POINT OF CONNECTIONS PRIOR TO INSTALLATION OF ANY PIPING.
4. LOCATIONS AND DEPTHS OF EXISTING UNDERGROUND UTILITIES AND OTHER UNDERGROUND OBSTRUCTIONS AND CONDITIONS ARE GENERALLY UNKNOWN AND IF SHOWN ARE AT APPROXIMATE LOCATIONS. CONTRACTOR SHALL HIRE A UTILITY LOCATING SERVICE TO LOCATE ALL EXISTING UNDERGROUND UTILITIES PRIOR TO DIGGING. VERIFY EXACT LOCATION SIZE AND EXTENT OF ALL OBSTRUCTIONS AND OTHER CONDITIONS WHICH MAY AFFECT THE PROPOSED WORK UNDER THE PROJECT. TAKE EVERY PRECAUTION TO PREVENT DAMAGE TO EXISTING WORK, INCLUDING HAND DIGGING AROUND EXISTING UTILITIES, TREE ROOT SYSTEMS, AND HARDSCAPE FEATURES. ANY DAMAGE TO EXISTING UTILITIES OR STRUCTURES SHALL BE IMMEDIATELY REPAIRED OR REPLACED IN ACCORDANCE WITH THE CLIENT'S DIRECTION AT THE CONTRACTOR'S EXPENSE.
5. CONTRACTOR SHALL EXERCISE EXTREME CARE TO AVOID DAMAGE IN EXPOSING UNDERGROUND SERVICES. AS NOTED ABOVE, THE CONTRACTOR SHOULD REQUEST THAT UTILITY AGENCIES LOCATE AND MARK ANY UNDERGROUND PIPING OR CABLES THAT MAY BE IN THE AREA OF WORK. WHERE AN UNDERGROUND FACILITY OR INSTALLATION IS ENCOUNTERED WHICH IS NOT SHOWN ON THE PLANS OR MENTIONED IN ANY OTHER CONTRACT DOCUMENT, THE CONTRACTOR SHALL DISCONTINUE THE EXCAVATION AND IMMEDIATELY CALL THE ARCHITECT FOR INSPECTION.
6. PRIOR TO INSTALLATION OF ANY SEWER AND STORM DRAIN LINES, THE CONTRACTOR SHALL PHYSICALLY VERIFY THE ELEVATION, SIZE AND MATERIAL AT THE POINT OF CONNECTION. IF THE ACTUAL ELEVATION IS HIGHER THAN INDICATED AND THE BUILDING SEWER OR DRAIN CANNOT BE INSTALLED AS SHOWN, THE CONTRACTOR SHALL NOT PROCEED WITH THE CONSTRUCTION OF SAID LINES AND SHALL IMMEDIATELY INFORM THE ARCHITECT.
7. STORM DRAINAGE:
COORDINATE INSTALLATION OF ROOF DRAINS WITH ROOFING SECTION OF THE WORK. INSTALL SIDE OR BOTTOM OUTLET AS REQUIRED. FURNISH FLASHING AND INSTALL AS REQUIRED. INSTALL AND TERMINATE DRAINS AS SHOWN.

ENERGY CONSERVATION NOTES:

1. ALL LAVATORY AND SINK FAUCETS AND SHOWERHEADS USED FOR OTHER THAN SAFETY REASONS SHALL BE EQUIPPED WITH FLOW CONTROL DEVICES. LAVATORY FAUCETS HAVE A MAXIMUM FLOW RATE NOT TO EXCEED 0.50 GALLONS (1.9 LITERS) AT 60 PSI AND 1.5 GALLONS FOR PRIVATE LAVATORY FAUCETS. METERED FAUCETS SHALL DELIVER A MAXIMUM OF 0.25 GALLONS (1.0 LITER) PER METERING CYCLE. (TITLE 25, CH. 25.08 OF THE CLARK COUNTY CODE)
2. CONTRACTOR SHALL ADJUST WATER HEATER THERMOSTAT SO THAT THE MAXIMUM TEMPERATURE OF HOT WATER SUPPLIED IS 120 DEGREES F.

FIXTURES:

1. ALL FIXTURES UNLESS NOTED OTHERWISE SHALL BE NEW, APPROVED, FREE FROM FLAWS AND BLEMISHES WITH CLEAR AND CLEAN FINISHED SURFACES.
2. PROVIDE ANGLE STOPS AT HOT AND COLD WATER SUPPLIES TO EACH FIXTURE. STOPS SHALL BE LOOSE KEY QUARTER TURN STOP, BRASS BALL AND STEM WITH STAINLESS STEEL ESCUTCHEON. BRASSCRAFT, NIBCO OR EQUAL.
3. ALL PLUMBING FIXTURES SHOWN ON DRAWINGS AND AS LISTED ON THE DRAWING FIXTURE SCHEDULE SHALL BE FURNISHED AND INSTALLED IN ACCORDANCE WITH MANUFACTURER'S INSTRUCTIONS. FIXTURES AND TRIM SHALL BE PROPERLY ANCHORED AND CAULKED ALONG ALL JOINTS.
4. ALL WALL PENETRATIONS SHALL BE PROVIDED WITH POLISHED CHROME-PLATED CAST BRASS WALL ESCUTCHEONS.
5. FIXTURE TRAPS ABOVE FLOOR SHALL BE CHROME PLATED "P" TRAPS WITH BRONZE NUTS UNLESS OTHERWISE INDICATED. TRAP ARMS SHALL BE 17 GAUGE CHROME-PLATED BRASS.

TESTS AND ADJUSTMENTS:

1. THE NEW PLUMBING SYSTEM SHALL BE FLUSHED AND THEN TESTED PER LOCAL CODE REQUIREMENTS AND ALL DEFECTS CORRECTED WITH NEW MATERIALS.
2. NO PIPING WORK, FIXTURES, OR EQUIPMENT SHALL BE CONCEALED OR COVERED UNTIL INSPECTED BY ENGINEER, WHO SHALL BE NOTIFIED WHEN THE WORK IS LEAK-TIGHT AND READY FOR INSPECTION. ALL TESTS SHALL BE REPEATED AS REQUIRED BY THOSE MAKING THE INSPECTION.
3. ALL NEW DOMESTIC WATER PIPING SHALL BE FLUSHED OUT, TESTED AT 150 PSIG AND SHALL BE LEFT UNDER PRESSURE OF SUPPLY MAIN OR A MINIMUM OF 50 PSIG FOR THE REMAINDER OF THE CONSTRUCTION PERIOD. NO AIR TESTING IS ALLOWED. TESTS ARE TO BE APPLIED FOR A MINIMUM PERIOD OF ONE HOUR AND UNTIL TESTS ARE COMPLETE. FINAL PRESSURES AT THE END OF THE TEST PERIOD SHALL BE NOT MORE NOR LESS THAN THAT CAUSED BY EXPANSION OR CONTRACTION OF THE TEST MEDIUM DUE TO TEMPERATURE CHANGES. PROVIDE ADDITIONAL VALVES AS REQUIRED IN THE NEW PIPING DURING CONSTRUCTION TO FACILITATE TESTING.
4. PLUMBING FIXTURES SHALL BE FILLED WITH WATER AND CHECKED FOR LEAKS AND RETARDED DRAINAGE FLOW. FAUCET AERATORS AND SHOWER HEADS SHALL BE REMOVED AND CLEANED THOROUGHLY.

DRAWING INDEX

SHEET NO.	DESCRIPTION	PERMIT 11/24/20					
P-0.0	COVER SHEET – PLUMBING	•					
P-0.1	DIAGRAMS & CALCULATIONS – PLUMBING	•					
P-1.1	SITE PLAN – PLUMBING	•					
P-2.1	FLOOR PLAN – PLUMBING	•					
P-3.2	PARTIAL ROOF PLAN – PLUMBING	•					

PLUMBING LEGEND

SYMBOL	ABBR.	DESCRIPTION
	POC	POINT OF CONNECTION
	(EX)	DENOTES EXISTING (SHOWN LIGHT)
	R	REMOVE EXISTING EQUIPMENT OR PIPING
——SS——	W OR SS	WASTE OR SANITARY PIPING ABOVE GRADE
– –SS– –	W OR SS	WASTE OR SANITARY PIPING BELOW GRADE
-----V-----	V	SANITARY VENT PIPING
——IW——	IW	INDIRECT WASTE PIPING
– –SO– –	SO	SAND/OIL WASTE PIPING
——SD——	SD	STORM DRAIN PIPING
——OSD——	OSD	OVERFLOW STORM DRAIN PIPING
——CD——	CD	CONDENSATE DRAIN PIPING (AIR CONDITIONING)
——D——	D	DRAIN PIPING
	CW	COLD WATER PIPING
	HW	HOT WATER PIPING
——FW——	FW	FILTERED WATER PIPING
	HW	WATER PIPING WITH SELF REGULATING HEAT TRACE CABLE
——TP——	TP	TRAP PRIMER LINE PIPING
——G——	G	GAS PIPING (0" W.C. TO 14" W.C.)
——MPG——	MPG	MEDIUM PRESSURE GAS PIPING (15" W.C. TO 5 PSI)
	GV	GATE VALVE
	BLV	BALANCING VALVE
	BV	BALL VALVE
	BFV	BUTTERFLY VALVE
	GC	GAS COCK
	PRV	PRESSURE REDUCING VALVE
	GPR	GAS PRESSURE REGULATOR
	RPBP	REDUCED PRESSURE BACKFLOW PREVENTER
	EQV	EARTHQUAKE VALVE
	P&TRV	PRESSURE & TEMPERATURE RELIEF VALVE
	FD	FLOOR DRAIN
	FS	FLOOR SINK
	GCO	CLEAN OUT TO GRADE
	FCO	FLOOR CLEANOUT
	WCO	WALL CLEANOUT
	HB	HOSE BIBB
	TP	TRAP PRIMER
	TH	THERMOMETER
	WHA 'X'	WATER HAMMER ARRESTER (P.D.I. SIZE)
	U	UNION
		VALVE ON RISE OR DROP
		PIPE TURNING DOWN
		PIPE TURNING UP
	VTR	VENT THRU ROOF
	B/F	BELOW FLOOR
	B/G	BELOW GRADE
	CFH	CUBIC FEET PER HOUR
	DFU	DRAINAGE FIXTURE UNITS
	ET	EXPANSION TANK
	FF	FINISHED FLOOR
	FU	FIXTURE UNIT
	GPF	GALLONS PER FLUSH
	GPM	GALLONS PER MINUTE
	IE	INVERT ELEVATION
	L	LAVATORY
	T	TONS OF REFRIGERATION (HVAC)
	TYP	TYPICAL
	U/G	UNDERGROUND
	U	URINAL
	VTR	VENT THRU ROOF
	V/PH/Hz	VOLTS/PHASE/HERTZ
	WC	WATER CLOSET
	RO	REVERSE OSMOSIS
	WH	WATER HEATER

PROFESSIONAL ENGINEER – STATE OF NEVADA
RADE KECMAN
Exp. 6/30/21
MECHANICAL
No. 10001

REVISIONS

#	DATE	DESCRIPTION

TURPIN & RATTAN ENGINEERING, INC.
CONSULTING MECHANICAL ENGINEERS
5880 W. SUNSET RD, SUITE 201
LAS VEGAS, NEVADA 89118
702 / 834 / 3880
TREI # 20337

GENERAL CONTRACTOR:
RED MESA BUILDERS
NEVADA CONTRACTORS B#81273
OFFICE: (702) 434-0046 FAX: (702) 434-0051
joe@redmesabuilders.com
4023 W. OQUENDO RD. STE B
LAS VEGAS NV 89118

PROJECT:
T. I. FOR DAIRY QUEEN AT
8045 BLUE DIAMOND ROAD, LAS VEGAS, NEVADA

SHEET TITLE:
COVER SHEET – PLUMBING

DESIGN CORE
ARCHITECTURE – PLANNING – INTERIORS
JIM BERENDJI, ARCHITECT, A.I.A.
P. O. BOX 778425, HENDERSON, NV 89077
PHONE: (702) 731-0293 berendji@embarqmail.com

DATE: 10-2-20
SCALE: AS NOTED
JOB #: 201001

P-0.0

FILE: C:\PROJECTS\JOE-RED-MESA\DAIRYQEEN-BLUDIAMOND\A-1.1.DWG DATE: 26 OCT 2020 TIME: 11:02 AM

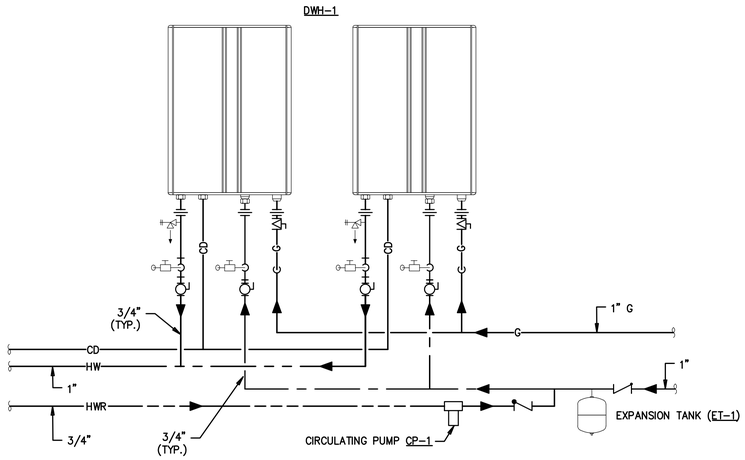

DOMESTIC WATER HEATER DIAGRAM (1 / P-0.1)

NO SCALE

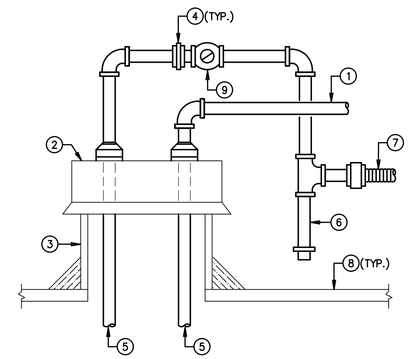

KEYNOTES

1. 3/4" CD SLOPED MIN. 1/8" PER FOOT FROM ROOFTOP MECHANICAL EQUIPMENT.
2. THYBAR MODEL TCC-3 OR EQUAL PIPE PENETRATION SYSTEM.
3. 14" HIGH ROOF CURB.
4. UNION.
5. GAS AND CD PIPING PER FLOOR PLAN.
6. DRIP LEG.
7. FLEXIBLE GAS PIPING TO EQUIPMENT CONNECTION.
8. ROOF.
9. GAS COCK.

ROOF TOP PIPING DIAGRAM (2 / P-0.1)

NO SCALE

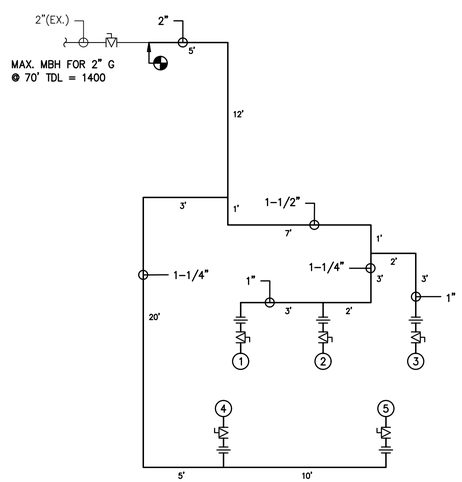

1. 1" G CONNECTION TO FRYERS (210 MBH)
2. 3/4" G CONNECTION TO CHAIN BROILER (45 MBH)
3. 3/4" G CONNECTION TO WATER HEATER (180 MBH)
4. 3/4" G CONNECTION TO RTU-1 (160 MBH)
5. 3/4" G CONNECTION TO RTU-2 (160 MBH)

NATURAL GAS PIPING DIAGRAM (3 / P-0.1)

NO SCALE

GREASE INTERCEPTOR CALCULATION

FIXTURE	# FIXTURES	DRAINAGE FIXTURE UNITS (DFU) EACH	DRAINAGE FIXTURE UNITS (DFU) TOTAL
SINK	2	2**	4
MOP SINK	1	3**	3
3" FLOOR SINK	2	6*	12
3" FLOOR DRAIN	1	6*	6
* AS PER TABLE 702.2(A), 2018 UPC ** AS PER TABLE 702.1, 2018 UPC			TOTAL = 25 DFU's

EXISTING GREASE INTERCEPTOR DFU SUMMARY

SITE	DFU
T1	21
T2	21
T3	21
DAIRY QUEEN	25
TOTAL:	88 DFU's

EXISTING 1,250 GALLON GREASE INTERCEPTOR PROVIDED.

PER TABLE 1014.3.6, 2018 UPC MAX. DFU's FOR 1,250 GALLON GREASE INTERCEPTOR = 90

PROFESSIONAL ENGINEER - STATE OF NEVADA
RADE KEEMAN
10-6-20
MECHANICAL
NO. 10001

REVISIONS

#	DATE	DESCRIPTION

TURPIN & RATTAN
ENGINEERING, INC.
CIVIL • STRUCTURAL • MECHANICAL ENGINEERS
5555 W. SUNSET RD. SUITE 201
LAS VEGAS, NEVADA 89118
702 / 364 - 0800
TREI # 20337

GENERAL CONTRACTOR:
RED MESA BUILDERS
NEVADA CONTRACTORS Bj#61273
OFFICE: (702) 434-0046 FAX: (702) 434-0051
joe@redmesabuilders.com
4023 W. QUENDO RD. STE B
LAS VEGAS NV 89118

PROJECT:
T. I. FOR DAIRY QUEEN AT
8045 BLUE DIAMOND ROAD, LAS VEGAS, NEVADA

SHEET TITLE:
DIAGRAMS & CALCULATIONS - PLUMBING

DESIGN CORE
ARCHITECTURE - PLANNING - INTERIORS
JIM BERENDJI, ARCHITECT, A.I.A.
P. O. BOX 778425, HENDERSON, NV 89077
PHONE: (702) 731-0293 berendji@embarqmail.com

DATE: 10-2-20
SCALE: AS NOTED
JOB #: 201001

P-0.1

FILE: C:\PROJECTS_JOC-RED-MESA\DAIRYQUEEN-BLUEDIAMOND\A-1.1.DWG DATE: 26 OCT 2020 TIME: 11:02 AM

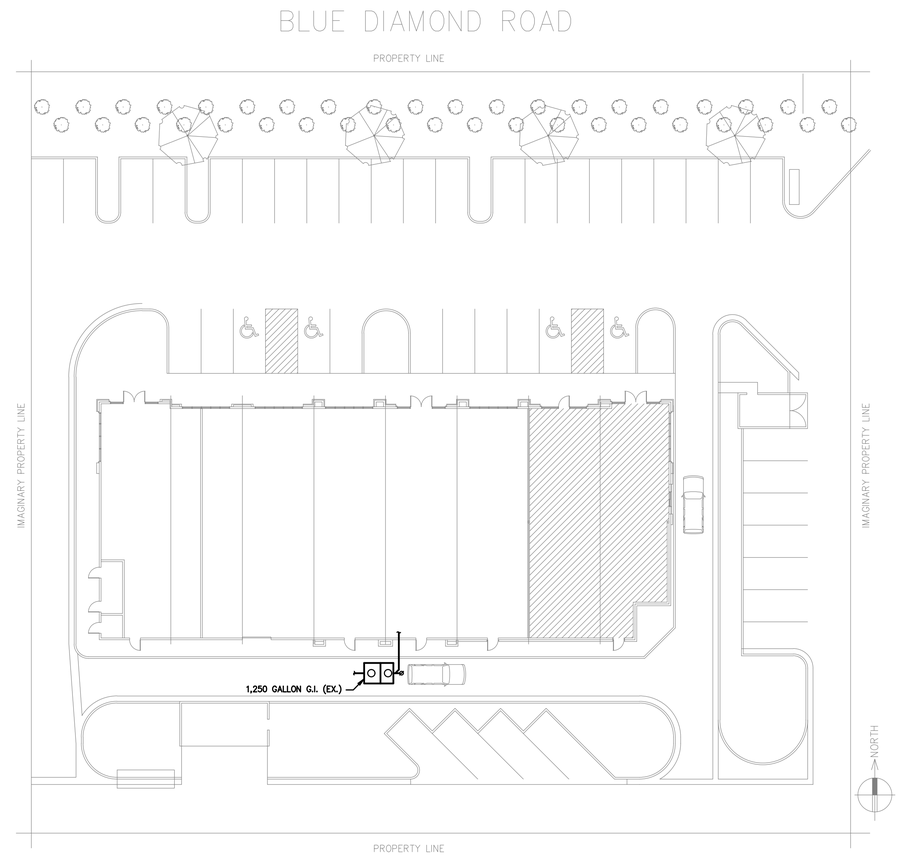

SITE PLAN – PLUMBING

1"=20'-0"

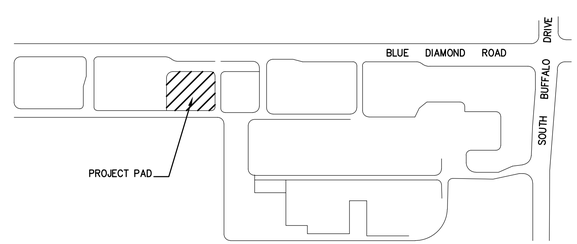

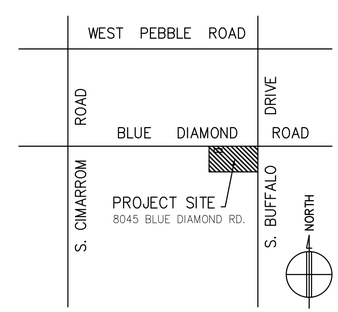

REVISIONS

#	DATE	DESCRIPTION

TURPIN & RATTAN
ENGINEERING, INC.
CONSULTING MECHANICAL ENGINEERS
5595 S. RAINBOW RD, SUITE 201
LAS VEGAS, NEVADA 89118
702 / 541 - 9995
TREI # 20337

GENERAL CONTRACTOR:
RED MESA BUILDERS
NEVADA CONTRACTORS B#81273
OFFICE: (702) 434-0046 FAX: (702) 434-0051
joe@redmesabuilders.com
4023 W. QUENDO RD. STE B
LAS VEGAS NV 89118

PROJECT:
T. I. FOR DAIRY QUEEN AT
8045 BLUE DIAMOND ROAD, LAS VEGAS, NEVADA

SHEET TITLE:
SITE PLAN – PLUMBING

DESIGN CORE
ARCHITECTURE – PLANNING – INTERIORS
JIM BERENDJI, ARCHITECT, A.I.A.
P. O. BOX 778425, HENDERSON, NV 89077
PHONE: (702) 731-0293 berendji@embarqmail.com

DATE: 10-2-20
SCALE: AS NOTED
JOB #: 201001

P–1.1

FILE: C:\PROJECTS_JOE-RED-MESA\DAIRYQUEEN-BLUEDIAMOND\P-1.1.DWG DATE: 26 OCT 2020 TIME: 11:02 AM

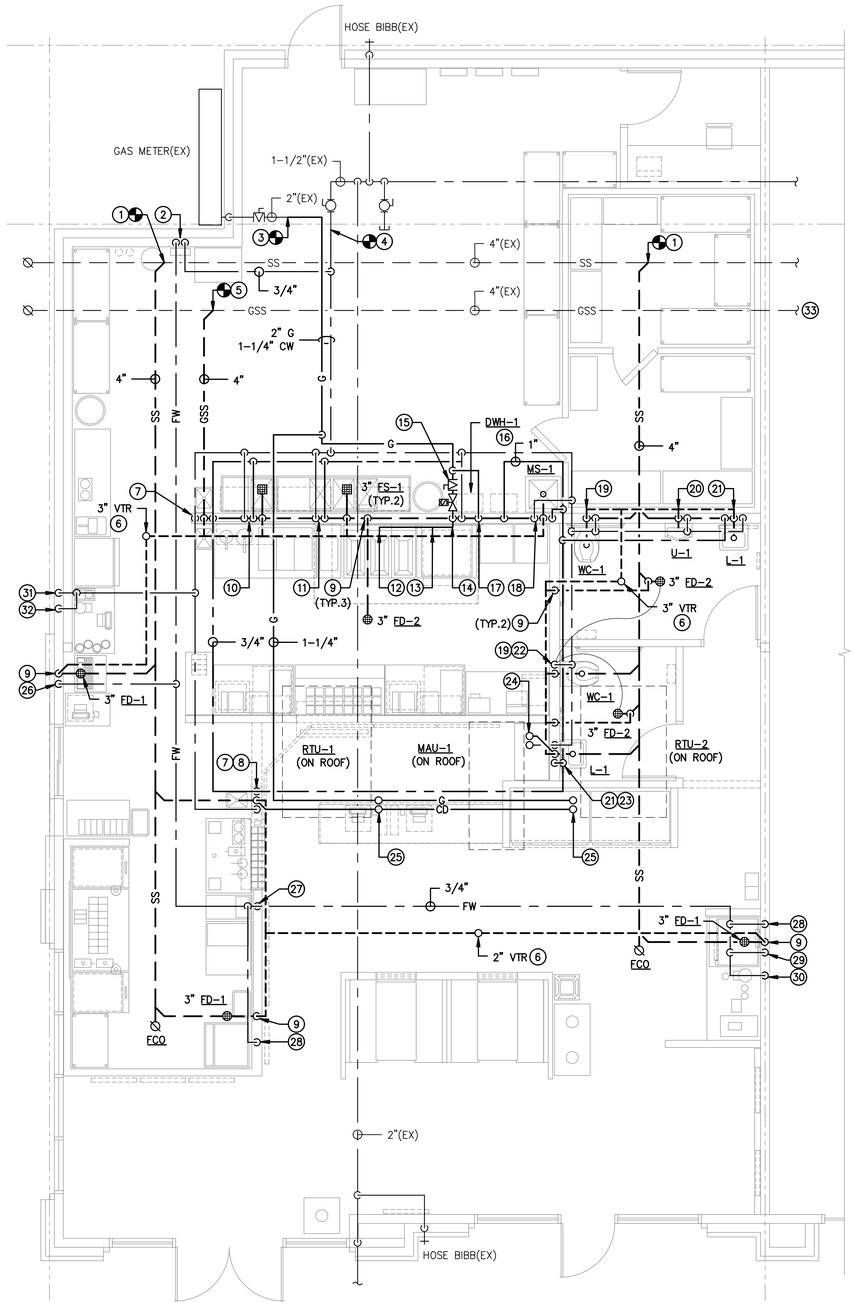

1 P-2.1 FLOOR PLAN – PLUMBING
1/4"=1'-0"

GENERAL NOTES

1.) REFER TO KITCHEN DRAWINGS FOR ROUGH-IN HEIGHTS, SIZES AND OTHER REQUIREMENTS.

KEYNOTES

1. CONNECT 4" SS PIPING TO EXISTING SS PIPING BELOW SLAB. CONTRACTOR TO FIELD VERIFY INVERT AND POINT OF CONNECTION.
2. 3/4" CW DOWN IN WALL TO WATER FILTER SYSTEM.
3. CONNECT 2" GAS PIPING TO EXISTING GAS PIPING IN CEILING SPACE. CONTRACTOR TO FIELD VERIFY POINT OF CONNECTION.
4. CONNECT 1-1/2" CW PIPING TO EXISTING CW PIPING IN CEILING SPACE. CONTRACTOR TO FIELD VERIFY POINT OF CONNECTION.
5. CONNECT 4" GSS PIPING TO EXISTING GSS PIPING BELOW SLAB. CONTRACTOR TO FIELD VERIFY INVERT AND POINT OF CONNECTION.
6. TERMINATE VENT THRU ROOF A MINIMUM OF 10'-0" FROM ANY OUTSIDE AIR INTAKE AND 3'-0" FROM EDGE OF ROOF. OFFSET PIPING AS NECESSARY.
7. 2" SS DOWN, 2" VENT UP AND 1/2" HW/CW DOWN IN WALL TO HAND SINK. PROVIDE THERMOSTATIC MIXING VALVE – WILKINS: MODEL ZW3870T, PRIOR TO FINAL HW CONNECTION.
8. 3/4" CONDENSATE DRAIN DOWN IN WALL AND DISCHARGE INTO SINK TAILPIECE.
9. 2" VENT UP IN WALL TO CEILING SPACE.
10. 1/2" HW/CW DOWN IN WALL TO SINGLE BOWL SINK.
11. 1/2" HW/CW DOWN IN WALL TO SRUB SINK.
12. 1" G TO BATTERY OF THREE FRYERS (210 MBH).
13. 3/4" G TO CHAIN BROILER (45 MBH).
14. 1-1/4" G DOWN IN WALL TO HEADER.
15. PROVIDE ELECTRONIC GAS SOLENOID VALVE INTERLOCKED WITH ANSUL (HOOD SPRINKLER) SYSTEM TO SHUT OFF GAS UPON ACTIVATION OF ANSUL SYSTEM.
16. DOMESTIC WATER HEATER. REFER TO 1/P-0.1 FOR DIAGRAM.
17. 1" G DOWN IN WALL TO DOMESTIC WATER HEATER (180 MBH).
18. 3" SS DOWN, 2" VENT UP AND 1/2" HW/CW DOWN IN WALL TO MOP SINK.
19. 4" SS DOWN, 2" VENT UP AND 3/4" CW DOWN IN WALL TO WATER CLOSET.
20. 2" SS DOWN, 2" VENT UP AND 3/4" CW DOWN IN WALL TO URINAL.
21. 2" SS DOWN, 2" VENT UP AND 1/2" HW/CW DOWN IN WALL TO LAVATORY FAUCET. PROVIDE THERMOSTATIC MIXING VALVE – WILKINS: MODEL ZW3870T, PRIOR TO FINAL HW CONNECTION.
22. 1/2" CW TO TRAP PRIMER (TP-1).
23. 3/4" DRAIN DOWN IN WALL AND DISCHARGE INTO LAVATORY TAILPIECE.
24. 3/4" CW UP AND 3/4" DRAIN DOWN FROM ROOFTOP MECHANICAL EQUIPMENT.
25. 1" G UP AND 3/4" CONDENSATE DRAIN DOWN FROM ROOFTOP MECHANICAL EQUIPMENT.
26. 1/2" FILTERED WATER DOWN IN WALL TO DRINK HEAD/ICE BIN.
27. 1/2" FILTERED WATER DOWN IN WALL TO AUTO FILL UNIT.
28. 1/2" FILTERED WATER DOWN IN WALL TO ICE MAKER. PROVIDE BACKFLOW PREVENTER – WATTS: MODEL LF009QT.
29. 1/2" FILTERED WATER DOWN IN WALL TO DRINK HEAD/ICE DISPENSER.
30. 1/2" FILTERED WATER DOWN IN WALL TO ICED TEA DISPENSER.
31. 1/2" CW DOWN IN WALL TO COFFEE MAKER.
32. 1/2" CW DOWN IN WALL TO ICED TEA DISPENSER.
33. GSS PIPING CONNECTS TO EXISTING 1200 GALLON COMMON INTERCEPTOR (BDBDR8045) MANAGED BY THE PROPERTY OWNER.

PROFESSIONAL ENGINEER – STATE OF NEVADA
RADE KECMAN
Exp. 6/30/21
MECHANICAL
No. 1000

REVISIONS

#	DATE	DESCRIPTION

TURPIN & RATTAN
ENGINEERING, INC.
MECHANICAL ELECTRICAL PLUMBING ENGINEERS
5595 S. RAINBOW RD, SUITE 501
LAS VEGAS, NEVADA 89118
(702) 361-4900
TREI # 20337

GENERAL CONTRACTOR:
RED MESA BUILDERS
NEVADA CONTRACTORS B#81273
OFFICE: (702) 434-0046 FAX: (702) 434-0051
joe@redmesabuilders.com
4023 W. QUENDO RD. STE B
LAS VEGAS NV 89118

PROJECT:
T. I. FOR DAIRY QUEEN AT
8045 BLUE DIAMOND ROAD, LAS VEGAS, NEVADA

SHEET TITLE:
FLOOR PLAN – PLUMBING

DESIGN CORE
ARCHITECTURE – PLANNING – INTERIORS
JIM BERENDJI, ARCHITECT, A.I.A.
P. O. BOX 778425, HENDERSON, NV 89077
PHONE: (702) 731-0293 berendji@embarqmail.com

DATE: 10-2-20
SCALE: AS NOTED
JOB #: 201001

P-2.1

FILE: C:\PROJECTS\LIFE-RED-MESA\DAIRYQUEEN-PLUM\AMENDV4-2.1.DWG DATE: 25 OCT 2020 TIME: 4:54 PM

KEYNOTES

1. TERMINATE VENT THRU ROOF A MINIMUM OF 10'-0" FROM ANY OUTSIDE AIR INTAKE AND 3'-0" FROM EDGE OF ROOF. OFFSET PIPING AS NECESSARY.
2. 3/4" CD DOWN TO AND 1" G UP FROM FLOOR BELOW. REFER TO SHEET P-2.1 FOR CONTINUATION.
3. 3/4" D DOWN TO AND 3/4" CW UP FROM FLOOR BELOW. REFER TO SHEET P-2.1 FOR CONTINUATION.

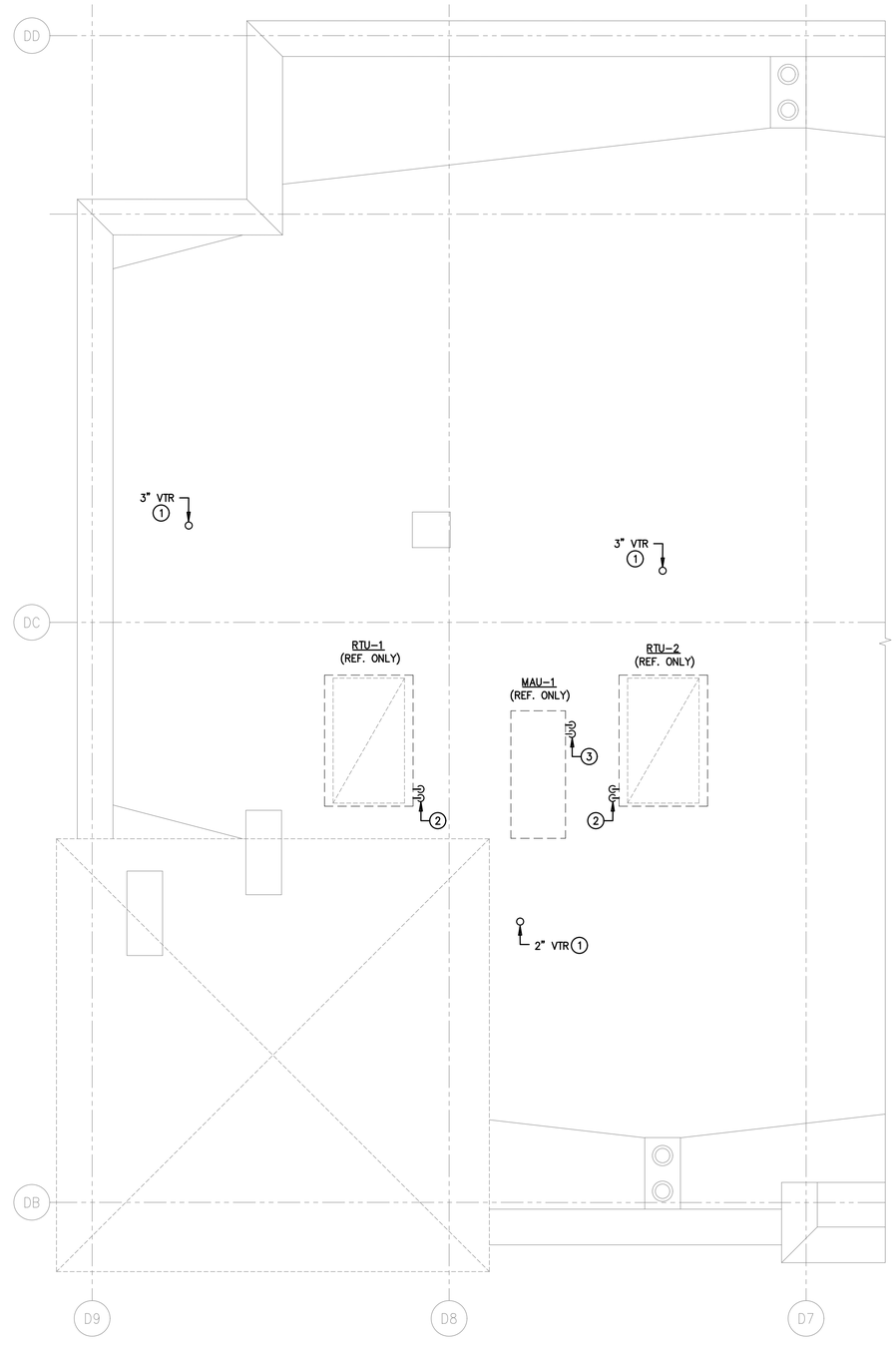

1 / P-3.2 PARTIAL ROOF PLAN – PLUMBING
1/4"=1'-0"

NORTH

RADE KECMAN
Exp. 6/30/21
MECHANICAL
No. 1000
PROFESSIONAL ENGINEER – STATE OF NEVADA

REVISIONS

#	DATE	DESCRIPTION

TURPIN & RATTAN
ENGINEERING, INC.
CONSULTING MECHANICAL ENGINEERS
8880 W. SUNSET RD. SUITE 251
LAS VEGAS, NEVADA 89118
702/ 734-1 4000
TREI # 20337

GENERAL CONTRACTOR:
RED MESA BUILDERS
NEVADA CONTRACTORS B#81273
OFFICE: (702) 434-0046 FAX: (702) 434-0051
joe@redmesabuilders.com
4023 W. QUENDO RD. STE B
LAS VEGAS NV 89118

PROJECT:
T. I. FOR DAIRY QUEEN AT
8045 BLUE DIAMOND ROAD, LAS VEGAS, NEVADA

SHEET TITLE:
PARTIAL ROOF PLAN – PLUMBING

DESIGN CORE
ARCHITECTURE – PLANNING – INTERIORS
JIM BERENDJI, ARCHITECT, A.I.A.
P. O. BOX 778425, HENDERSON, NV 89077
PHONE: (702) 731-0293 berendji@embarqmail.com

DATE: 10-2-20
SCALE: AS NOTED
JOB #: 201001

P-3.2

FILE: C:\PROJECTS_JOB-RED-MESA\DAIRYQUEEN-PLUM\MEND\A-3.2.DWG DATE: 23 OCT 2020 TIME: 9:32 PM

Department of Building and Fire Prevention

4701 West Russell Road Las Vegas NV 89118
Building Division (702) 455-3000 Fire Prevention Division (702) 455-7316

Jerome A. Stueve, P.E., Director
Samuel D. Palmer, P.E., Assistant Director | Jim Gerren, P.E., Assistant Director

Commercial Building Remodel/Repair

Restaurant

PERMIT NUMBER: BD20-50732 ISSUE DATE: 04/07/2021

SITE ADDRESS: 8045 BLUE DIAMOND RD, LAS VEGAS, NV-89178 PARCEL NUMBER: 176-21-610-007

PROJECT NAME: POD 111 AT MOUNTAINS EDGE

TENANT NAME: DAIRY QUEEN TENANT #:

PROPERTY OWNER: BLUE DIAMOND M-E L L C & ALBERTSON'S L L C LEASE

CONTRACTOR NAME: RED MESA BUILDERS INC LICENSE TYPE: B-General Building

SCOPE OF WORK: TENANT IMPROVEMENT PER PLANS

PERMIT DETAILS	RELATED CONDITIONS
VALUATION: $220,000.00 SQUARE FOOTAGE: 2406 TYPE OF CONSTRUCTION: OCCUPANCY: OCCUPANT LOAD: 56 UNITS/ROOMS: n/a Code Year: 2018	The following related permits are required to be obtained by appropriately licenses sub-contractors: Commercial Electric BD20-50732-E Commercial Plumbing BD20-50732-P Commercial Mechanical BD20-50732-M

This permit becomes null and void if work or construction is not commenced within 180 days from date of issuance, OR if work is suspended or abandoned (no approved inspections) for a period of 180 days any time after work is commenced.

Conditions of Permit

This permit is issued to the Permittee Subject to the following conditions:
By accepting this permit, I, the Permittee, agree to 1) build the project described above in accordance with the approved construction documents and the Clark County Code; and 2) I agree to schedule required inspection as each construction phase is completed.

LICENSED CONTRACTOR DECLARATION

I hereby affirm that I am licensed pursuant to the provisions of NRS 624.283

OWNER-BUILDER DECLARATION

I am the owner of the real property upon which I will build the project described above.A□ The project will be a residential structure which I will occupy, and is not intended for sale or lease, or the offering for sale or lease, for at least 1 year after its completion.A□ I intend to act as my own contractor and I have obtained an exemption pursuant to NRS 624.031(4). I understand that I may be liable to civil and criminal penalties under NRS 624.212 and NRS 624.700 if I act as a contractor in violation of NRS Chapter 624. [Note: this is in addition to the statement of restrictions that must be delivered to the owner pursuant to NRS 278.573]

Important: Always use the permit number above when requesting inspections or information concerning this permit. 04/07/2021 AAdmin